Universidade de São Paulo
Instituto de Física

Sobre Paradoxos Quânticos Possibilísticos e Contextualidade Lógica

Leonardo Silva Vieira Santos

Orientador(a): Profa. Dra. Bárbara Lopes Amaral

Dissertação de mestrado apresentada ao Instituto de Física da Universidade de São Paulo, como requisito parcial para a obtenção do título de Mestre(a) em Ciências.

Banca Examinadora:
Prof(a). Dr(a). Barbara Lopes Amaral (Orientadora) - IFUSP
Prof(a). Dr(a). Marcelo de Oliveira Terra Cunha - Unicamp
Prof(a). Dr(a). Cristhiano André Gamarano Duarte Carneiro Silva - University of Leeds

São Paulo
2021

University of São Paulo
Physics Institute

On Quantum Possibilistic Paradoxes and Logical Contextuality

Leonardo Silva Vieira Santos

Orientador(a): Profa. Dra. Bárbara Lopes Amaral

Dissertation submitted to the Physics Institute of the University of São Paulo in partial fulfillment of the requirements for the degree of Master of Science.

Examining Committee:
Prof. Dr. Barbara Lopes Amaral (advisor) - IFUSP
Prof. Dr. Marcelo de Oliveira Terra Cunha - Unicamp
Prof. Dr. Cristhiano André Gamarano Duarte Carneiro Silva - University of Leeds

São Paulo
2021

Acknowledgments

First of all I thank my family for everything; my uncle José, Elaine, Bruno, and Neuza (in memorian) for the comfortable hosting during part of this Master's; and my advisor, Prof. Bárbara Amaral, for accepting me into your group, guiding me through these two years, and for all contributions you have made in my academic life and beyond. I also thank all the professors I have had since the beginning of my undergrad studies, in particular I highlight Profs. Gabriel Landi, Márcio Bortoloti, Jorge Anderson, and Ivanor Nunes (in memorian). I thank the friends that Physics gave me, among which I highlight the "derivators": Emmanuel, Erison, and Pablo; Thiago and his cosmo-collegues; and also my group colleagues: Alisson, Ari, Daniel, Giulio, Gustavo, Marina, Rafael, Silvio, and Tiago. I also leave a thank to my non-academic friends, in particular: Shirley for the beers and chats, my crazy Colombian friend Karol for nothing (I only mentioned you because I like you), and Gabrielle for the long chats, English helps, and for all the ABBA songs we listen to. Finally, thanks to everyone who kept the correlations with me as strong as possible despite the space-like separation. A special ¬thank to COVID-19 (and its collaborators).

Finally, I thank the Conselho Nacional de Pesquisa Científica (CNPq), which supported my Master's through Grant No. 155496/2019-0, and consequently all the taxpayers who finance public education.

Abstract

In the present master's thesis we study logical contextuality and inequality-free proofs of quantum contextuality and nonlocality. The former concept can be understood as the possibilistic version of contextuality, while the latter refers to proofs of quantum probabilistic non-classicalities that are not based on violation of any noncontextuality (or Bell) inequality. The present work aims to build a bridge between these two concepts through what we call possibilistic paradoxes, which are sets of possibilistic conditions whose occurrence implies contextuality. As our main result, we demonstrate the existence of possibilistic paradoxes whose occurrence is a necessary and sufficient condition for logical contextuality in a very important class of scenarios. We discuss some consequences arising from the completeness of such possibilistic paradoxes. Finally, we review some inequality-free proofs under the light of the developed formalism.

Keywords: Contextuality; Bell Nonlocality; Logical Contextuality; Inequality-free proofs; Hardy-like proofs.

Resumo

Na presente dissertação de mestrado estudamos contextualidade lógica e provas livres de desigualdades. O primeiro conceito pode ser entendido como uma versão possibilistica da noção de contextualidade, enquanto o segundo refere-se a provas de não-classicalidades probabilisticas em mecânica quântica que não envolvem a violação de alguma desigualdade de não-contextualidade (ou desigualdade de Bell). O presente trabalho conecta estes dois conceitos através do que chamamos de paradoxos possibilísticos, que são conjuntos de condições possibilísticas cuja ocorrência implica contextualidade. Como principal resultado, demonstramos a existência de paradoxos possibilísticos cuja ocorrência é uma condição necessária e suficiente para contextualidade lógica em uma classe importante de cenários. Discutimos algumas consequências advindas da completude de tais paradoxos. Por fim, revisamos algumas provas livres de desigualdades sob o ponto de vista do formalismo desenvolvido.

Palavras-Chave: Contextualidade; Não-Localidade de Bell; Contextualidade Lógica; Provas Livres de Desigualdades; Hardy-like Provas.

Notations and Abbreviations

- NC: Noncontextuality;
- NCI: Noncontextuality inequatity;
- $[n] \equiv \{m \in \mathbb{N} : m \leq n\}$;
- $0 \notin \mathbb{N}$
- $\mathbb{R}^+ \equiv \{x \in \mathbb{R} : x \geq 0\}$;
- $\mathrm{Prob}(O^C) := \{p : O^C \to \mathbb{R}^+ : \sum_{s \in O^C} p(s) = 1\}$;
- If C and O are nonempty sets, O^C denotes the set of functions from C to O;
- If $p : C \to O$, and $U \subseteq C$, $s|_U$ denotes the restriction of s onto U, *i.e.* $s|_U : U \to O$ such that $s|_U(u) = s(u)$ for all $u \in U$;
- If p is a probability distribution over some O^C, $\bar{p}$ denotes the possibilistic collapse of p [Def. 13];
- LC: Logical contextuality;
- SC: Strong contextuality;
- PP: Possibilistic paradox;
- OM: Ontological models.

List of Figures

List of Tables

Contents

Introduction

Quantum theory is perhaps the most successful scientific theory of today. Part of this success is due to its clear mathematical foundation and the agreement of its predictions with experimental results. As examples of this incredible predictive power, we may cite the seminal von-Klitzing's contributions to the study of quantized Hall effects [1, 2], which allowed the determination of the fine structure constant α with the extraordinary precision of 0.15 parts per billion [3]. Furthermore, a large fraction of the technological development from the second half of the twentieth century onwards is due to the systematic study of quantum nature of matter and light, ranging from basic science, *e.g.* the use of optomechanical oscillators in the LIGO/Virgo collaboration for the first experimental observation of gravitational waves from a binary black hole merger [4], to electronic devices used in our daily life today and possibly in the future, *e.g.* quantum computers [5].

In contrast to its successful predictions and applications, the quantum mechanical description of physical reality is still not fully understood. In fact, despite having been developed for nearly a century, several aspects of the theory still remain a mystery today. Quantum foundations is the discipline of science whose goal is to understand the quantum description of nature. In particular, it seeks to shed light on the most counter-intuitive aspects of the theory, demonstrating where and how such a description really deviates from what could be called classical. The term "classical" usually refers to concepts that are present in non-quantum physical theories and are on the ground of our daily intuition.

In the present master thesis the concept we are interested in is probability. This interest can be justified by the fact that, pragmatically speaking, quantum theory is a probabilistic theory, in the sense that it "only" provides a set of rules for the computation of statistical properties of observable quantities in different experimental situations. Its mathematical formalism provides very clear ways of calculating such properties. However, the "nature" of quantum probabilities is quite different from our daily intuition about probabilistic descriptions. In particular, in some specific situations, it is quite difficult to explain the obtained quantum results in terms of any model in which measurements are understood as interventions that reveal pre-existing system properties. At the core of these differences are the concepts of contextuality and nonlocality.

Quantum nonlocality is an often abbreviation to the statement that quantum probabilistic predictions are incompatible with any model jointly satisfying the properties of realism, locality, and free will. The occurrence of this intrinsically non-classical property was first noted by John Stewart Bell, in a seminal paper published more than fifty years ago [6]. In his paper, Bell aimed to shed light in a paradox proposed by A. Einstein, B. Podolsky, and N. Rosen (EPR), whose authors' conclusions were that quantum mechanical description of physical reality could not be considered complete [7]. Bell, on the other hand, showed in his aforementioned paper that any completion for quantum mechanics must be nonlocal. In other words, Bell's conclusion was that

local observables of multipartite quantum systems cannot have predefined values independently of which (or whether) interventions are made in different spatially separated parts.

In a sense, Bell's fundamental idea was to transform abstract or even philosophical arguments into a mathematical theorem. In particular, Bell demonstrated the existence of an inequality (known as Bell inequality) obeyed by every local realistic theory (up to free will) but violated by quantum predictions. In this direction, an important step in quantum nonlocality was taken by Clauser-Horne-Shinomy-Holt (CHSH), who proposed another inequality (known as CHSH inequality) with enormous importance from both theoretical and experimental point of view [8]. In particular, the pioneering experimental verification of quantum nonlocality in the Aspect *et al.* works are based on violations of such an inequality [9–11].

Quantum contextuality generalizes the notion of quantum nonlocality removing the need of space-like separations to exclude the possibility of completions for quantum theory by any model in a wide class of possible ones. More precisely, such a non-classical property refers to the impossibility of reproducing quantum mechanical predictions by models in which measurement outcomes revel pre-existing system properties whose values are independent of the measurement context, *i.e.* independent of which (or whether) other compatible measurements are jointly performed. The occurrence of this type of non-classicality in quantum theory was first noted by Bell [12] and Kochen-Specker [13]. The notion of contextuality as "generalized nonlocality", however, was established only after the contribution of Klyachko-Can-Binicioglu-Shumovsky (KCBS) [14], where a CHSH-like demonstration of quantum contextuality was proposed.

Nowadays, both contextuality and nonlocality are understood in a unified way from a more operational point of view, where both concepts emerge as non-classical properties that can appear in quantum statistics. Such a point of view became popular from the so-called "black-box paradigm" for nonlocality [15, 16], the sheaf-theoretical approach by Abramsky-Brandenburger [17], and the graph-theoretical approach by Cabello-Severini-Winter [18, 19]. Therefore, throughout this master's thesis we will understand contextuality (and nonlocality as a particular case) as a non-classical property of probabilistic data tables. Other possible notions, such as Spekkens' generalized notion [20] or Contextuality-by-Default (CbD) [21], will be not considered in the present work.

The assumption of noncontextuality (NC) imposes strong constraints on the possible empirically observed probabilities. A powerful way to express such restrictions is through linear inequalities that are obeyed whenever a description in terms of NC models is possible. Such inequalities generalizes the notion of Bell inequalities for nonlocality, and they are usually called noncontextuality inequalities (NCI). Currently, the best known instances of NCIs are the aforementioned CHSH and KCBS. Furthermore, any set of NCIs that defines an H-representation for the NC polytope provides also necessary and sufficient conditions for contextuality [Sec. 1.3].

A different and more intuitive approach to obtain contradictions between quantum predictions and NC models is by using the possibilistic information of quantum probabilistic data. In other words, only the information of which results are possible/impossible can be sufficient to demonstrate its contextual character. Such an approach gave rise to so-called "inequality-free proofs", pioneered by Heywood and Redhead [22]; Greenberger, Horne, Shimony, and Zeilinger [23, 24]; and Hardy [25, 26]. We highlight the latter, which stands out for its simplicity and generality, being considered the simplest or the best proof of quantum nonlocality [27]. Hardy's main ideas were to demonstrate how a small set of possibilistic conditions implies nonlocality, and then explicit show how such conditions can be realized within a quantum mechanical system.

Several generalizations and developments of Hardy's ideas have been proposed in the last decades [28–32]. In particular, we highlight the contribution due to Cabello *et al.* [33]. In that paper, the authors proposed a "Hardy-like proof" to quantum contextuality in a scenario without space-like separation, namely the KCBS scenario [14]. In addition to theoretical developments, inequality-free proofs of quantum contextuality and nonlocality have been subject to several experimental verification [34–38].

Another central concept in this work is that of logical contextuality (LC). This concept arises naturally in the formalism of Abramsky-Brandenburger [17]. In this formalism the authors, based on a generalization of Fine's theorem [39] and in some insights provided by sheaf theory, stated contextuality as a phenomenon that arise whenever local consistence does not imply global consistent in a set of distributions (that is, normalized functions from a nonempty set to a commutative semiring). The usual notion of contextuality is recovered when sets of probability distributions are considered. If instead sets of possibility distributions are considered (*i.e.* when the semiring is the Booleans), we deal with the concept of logical contextuality. The importance of this concept is that it provides a very systematic and general way of defining (non)contextuality from the possibilistic structure of probabilistic data.

Both inequality-free proofs and LC are related with violations on logical constrains imposed by the assumption of NC. The connection between these two concepts, on the other hand, it is not yet so clear. In an inequality-free proof we have a set of possibilistic conditions that implies contextuality. Here, we call any of these sets of conditions a possibilistic paradox (PP). It is clear that the occurrence of some PP implies LC, suggesting that these are the possibilistic analogue of NCI. To make this analogy more accurate and for a better understanding of LC, however, some questions still need to be addressed. The main one is the following: what are (if any) set(s) of PP(s) whose occurrence is a necessary and sufficient condition for LC? A partial answer to this question was proposed by Mansfield and Fritz [40] for some bipartite Bell scenarios from a generalization of the PP proposed in the Hardy's proof [26].

The main goal of this master's thesis is to present the results published in Ref. [41], where the author together with his advisor proposed a generalization of the results of Ref. [40]. In summary, it was demonstrated that the occurrence of a specific set of PPs is a necessary and sufficient condition for LC in an important class of scenarios, namely the scenarios whose contexts have at most two dichotomic measurements (called here simple scenarios). In addition, we discuss some interesting consequences arising from the completeness of the proposed sets of PPs. The PPs we propose have a very clear and friendly form, and they are defined as n-cycle generalizations of those present in the Hardy [25,26] and Cabello *et al.* [33] inequality-free proofs. As a consequence of this result, we conclude that the only strongly contextual behaviours for the n-cycle scenarios are analogous to the Popescu-Rohrlich boxes. Moreover, with a minor modification of the proposed PPs, its completeness still holds for the n-cycle scenarios with non-dichotomic measurements. Finally, we discuss some inequality-free proofs of quantum contextuality and nonlocality under the light of the presented formalism.

In addition to presenting the aforementioned results, in this master's thesis we review the main definitions and results on contextuality and nonlocality, under the probabilistic and possibilistic approaches in two respective chapters, in order to understand their similarities and differences. We finish this work with some final remarks, where a summary of conclusions and possible continuations in future contributions is presented.

Chapter 1
Probabilistic Contextuality and Nonlocality

This chapter aims to provide a bird eye review on contextuality and nonlocality. Our presentation emphasizes the mathematical foundation of such concepts, rather than philosophical and/or historical discussions. Furthermore, in our discussion the statistical data are themselves the object of study. From this point of view, it is possible to treat contextuality and nonlocality in a unified way, where the latter is a particular form of the former. The main idea is that both concepts are related to the impossibility of consistent global descriptions of probabilistic data.

1.1. Contextuality: Compatibility Hypergraph Approach

Suppose an experimenter in a laboratory with a finite set of measurements to be performed in a hypothetical physical system. Every available measurement can be labeled by an element in a finite set X, and, when it is performed, a macroscopic effect is observed. Consider that there are only a finite number of macroscopically distinguishable outcomes, in such a way that we can label them by elements in a finite set O. Moreover, some sets of measurements can be jointly performed (called compatible sets), while others cannot (called incompatible sets). The information of which measurements are available, its possible outcomes, and which compatible sets we can jointly perform define a compatibility scenario and its associated compatibility hypergraph.

Definition 1. A *compatibility scenario* (or just a scenario) is defined by triple $(X, \mathcal{C}, O)$, where X and O are finite sets, and $\mathcal{C}$ is a family of subsets of X such that $\cup\mathcal{C} = X$, and $C \subseteq C'$ implies $C = C'$ whenever $C, C' \in \mathcal{C}$. The *compatibility hypergraph* of a scenario is the hypergraph whose set of vertices is X and the set of hyperedges is $\mathcal{C}$.

Given a compatibility scenario $(X, \mathcal{C}, O)$, each element of $\mathcal{C}$ defines a maximal set of compatible measurements, called a *context*. The family $\mathcal{C}$ is usually called the *compatibility cover* of the scenario. Joint outcomes for the measurements in a context C can be represented by functions from C to O, and the set of these functions is denoted by O^C. Since $O^C \simeq O^{|C|}$, joint outcomes can also be represented by strings with $|C|$ elements, one for each element of C. In what follows, it will be useful to keep both representations in mind.

Given a joint outcome $s \in O^C$, if we want to refer to a specific information concerning a subset of measurements $U \subseteq C$, then we just need to restrict the function s to the subset U. Following the notation adopted in Ref. [17], we denote this restriction by $s|_U$. Intuitively, this operation transforms the string $(s(m) : m \in C)$ into $(s(m) : m \in U)$.

Figure 1.1: Compatibility graph for Bell scenarios $(2, k, \ell)$ [Example 1].

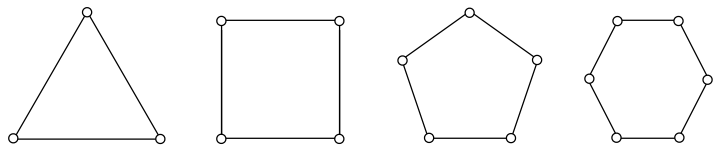

3-cycle 4-cycle 5-cycle 6-cycle

Figure 1.2: Compatibility graph for n-cycle scenarios [Example 2].

Remark. In what follows, if $(X, \mathcal{C}, O)$ is a compatibility scenario and $\Omega \subseteq X$ is non-empty, O^{Ω} will always denote the set of functions from Ω to O.

Example 1 (Bell scenarios)**.** A Bell scenario is defined by a pair $(\mathfrak{B}_{n,k}, \{0, \ldots, \ell - 1\})$, where $\mathfrak{B}_{n,k}$ denotes the n-partite hypergraph, where each part has k vertices, and the hyperedges are constructed taking one, and only one, vertex of each part, and ℓ is the number of possible outcomes for each measurement. We simply refer to a Bell scenario by a triple (n, k, ℓ).

In a Bell scenario, the parts of $\mathfrak{B}_{n,k}$ are associated to different spatially separated parts. One may think, for instance, that each of these parts is a different laboratory with an experimenter (Alice, Bob, Charlie, ...) performing measurements in his/her part of a multipartite physical system.

Example 2 (n-cycle scenarios)**.** The n-cycle scenario is defined by a pair $(\mathfrak{C}_n, \{0, 1\})$, where $\mathfrak{C}_n$ denotes the cyclic graph with n vertices.

The n-cycle scenarios will have a very important role in our discussion. One of the reasons is that the scenarios corresponding to $n = 4$ and $n = 5$ have an almost paradigmatic role in foundations and quantum information theory. These scenarios are also known as CHSH ($n = 4$) and KCBS ($n = 5$), due to the seminal works of Clauser-Horne-Shimony-Holt [8] and Klyachko-Can-Binicioglu-Shumovsky [14], respectively. It is interesting to notice that $\mathfrak{B}_{2,2} \simeq \mathfrak{C}_4$, meaning that the CHSH scenario can be interpreted as a bipartite Bell scenario.

A compatibility scenario is said to be *simple* if its contexts have at most two measurements, *e.g.* bipartite Bell scenarios $(2, k, \ell)$ and n-cycle. In this case, the associated compatibility hypergraph is just a graph (see Fig. 1.1 and Fig. 1.2). If the compatibility hypergraph of a scenario has no cycles as induced subgraphs we then say that the scenario is *acyclic*.

A *measurement event* refers to the choice of some compatible set to be performed followed by the observation of some joint outcome. This situation may be illustrated by a laboratory where a source prepares the system in some way, and then the experimenter provides an input of compatible measurements obtaining a joint outcome as output. For instance, in the bipartite

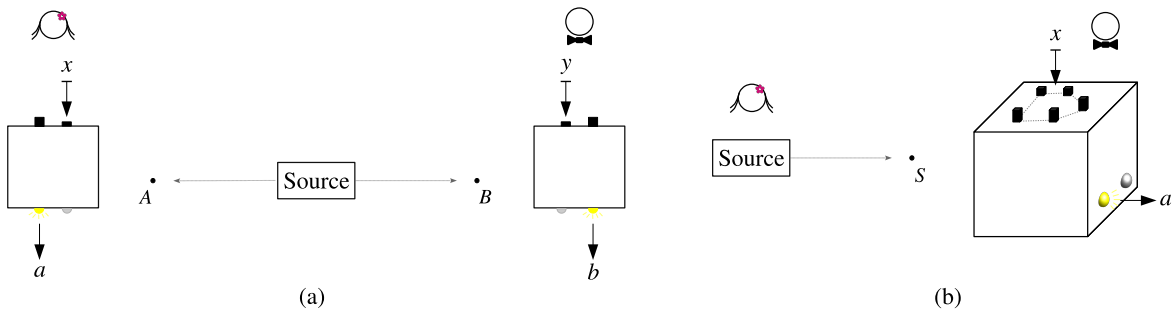

Figure 1.3: Pictorial visualization of a measurement event for the bipartite Bell scenario (2,2,2) (a) and KCBS (b).

Bell scenarios one may think in pairs of particles, A and B, created at a common source, and then sent to the laboratories of two experimentalists, Alice and Bob, respectively (see Figure 1.3 (a)). In a scenario without space-like separation, for instance the KCBS scenario, one may think in Alice preparing the system S in some way while Bob performs joint measurements pressing buttons according to the compatibility relations of the scenario (see Figure 1.3 (b)).

A single measurement event in general does not provide sufficient information to compare experimental results with theoretical predictions. In fact, a measurement event provides one (and only one) joint outcome, while (in general) our theories predict probability distributions. The experimenter needs to repeat the same experimental procedure (preparation followed by measurements) a number of times in order to estimate probabilities by relative frequencies.

Given a compatibility scenario $(X, \mathcal{C}, O)$, we say that p is a probability distribution for the context $C \in \mathcal{C}$ if it is a normalized function from the set of joint outcomes O^C to the non-negative real numbers, that is, $p : O^C \to \mathbb{R}^+$ such that

$$\sum_{s \in O^C} p(s) = 1.$$

We denote by $\mathrm{Prob}(O^C)$ the set of probability distributions for the context $C \in \mathcal{C}$. If $U \subseteq C$ is a subset of measurements of the context C, we then define the marginal probability distribution for U given $p \in \mathrm{Prob}(O^C)$ as

$$p|_U(u) := \sum_{s \in O^C \,:\, s|_U = u} p(s),$$

for all $u \in O^U$. That is, the summation in the above equation is over the joint outcomes for the context C compatible with a given information provided in the subset $U \subseteq C$ by $u \in O^U$.

The probabilistic information obtained from a physical system prepared in some way given a compatibility scenario defines what we call a behaviour.

Definition 2. A *behaviour* for a scenario $(X, \mathcal{C}, O)$ is defined by a collection of probability distributions over the set of joint outcomes, *i.e.* $\mathrm{B} = \{p_C \in \mathrm{Prob}(O^C) : C \in \mathcal{C}\}$.

The above definition simply refers to sets of probability distributions that can be associated to a given scenario. Not all behaviours, however, are physically relevant. In particular, we have sufficiently strong reasons to consider only behaviours obeying a nondisturbance (ND) condition.

Definition 3. A behaviour $\mathrm{B} = \{p_C \in \mathrm{Prob}(O^C) : C \in \mathcal{C}\}$ for a scenario $(X, \mathcal{C}, O)$ obeys the *nondisturbance condition* if marginal distributions agree on overlapping contexts, *i.e.*

$$\sum_{s \in O^C \,:\, s|_{C \cap C'} = u} p_C(s) = \sum_{s' \in O^C \,:\, s'|_{C \cap C'} = u} p_{C'}(s'), \tag{1.1}$$

for all $C, C' \in \mathcal{C}$ and $u \in O^{C \cap C'}$.

For scenarios with space-like separation, ND has a very clear physical meaning. In fact, notice that the probability distributions of each part are marginal distributions of the probability distributions of the behaviour, and then ND implies that neither part is able to infer from its probabilistic data which measurements were chosen by the other ones. In other words, the probabilistic data of a ND behaviour cannot be used to send any message (or signal) between the parts. For this reason, in Bell scenarios ND is sometimes called *non-signaling* [42].

It is possible to extend this argument for scenarios without space-like separations. If we consider that each measurement can be performed in its own experimental apparatus, in such a way that compatibility is read as commutativity (such as occurs in quantum mechanical scenarios with projective measurements), the assumption of ND states that preparation procedures do not depend on which measurement context was (or will be) considered. This is quite reasonable, because experimenters prepare the system before making any measurement (*cf.* Ref. [43]). There are, however, several fine points about ND and its consequences that will not be discussed here.

The most important reason we consider only ND behaviours is that such a condition is satisfied by both classical and quantum probability theories. This fact will be proved in the following sections of the present chapter. In what follows, it is important to keep in mind that ND will always be assumed.

The set of ND behaviours (or simple the ND set) has a particularly important subset, the noncontextual (NC) one.

Definition 4. A behaviour $\mathrm{B} = \{p_C \in \mathrm{Prob}(O^C) : C \in \mathcal{C}\}$ for a scenario $(X, \mathcal{C}, O)$ is *noncontextual* if there exists a probability distribution p over O^X such that

$$p|_C(s) := \sum_{t \in O^X \,:\, t|_C = s} p(t) = p_C(s), \tag{1.2}$$

for all $C \in \mathcal{C}$ and $s \in O^C$.

It is easy to verify that NC behaviours are also ND. The converse, however, in general does not hold: there exist ND behaviours that are not NC [Example 3]. When it happens we say that the behaviour is *contextual*.

Definition 5. A ND behaviour B for a scenario $(X, \mathcal{C}, O)$ is *contextual* if there is no probability distribution over O^X such that the condition (1.2) holds for all $C \in \mathcal{C}$ and $s \in O^C$.

Remark. When dealing with Bell scenarios (or their generalizations) contextuality is called *nonlocality*.

	$(0,0)$	$(1,0)$	$(0,1)$	$(1,1)$
M_1M_2	$1/2$	0	0	$1/2$
M_2M_3	$1/2$	0	0	$1/2$
M_3M_1	0	$1/2$	$1/2$	0

Table 1.1: A nondisturbing behaviour that is not noncontextual [Example 3]. Each entry of the table is the probability for the joint outcome (a,b) given a context $\{M_\mu, M_\nu\}$.

Example 3 (Specker's Triangle [44, 45])**.** Consider the 3-cycle scenario and the distributions represented in table 1.1. It is easy to verify that this behaviour is ND. However, if one suppose the existence of a probability distribution p reproducing this behaviour by marginals, the zero entries of the table would imply that p is the zero function, which is a contradiction. So, this is an example of contextual behaviour.

Def. 5 states contextuality as a phenomenon that arise when local consistency does not imply global consistency in a set of probability distributions. Local consistency is provided by ND condition, since it prevents ambiguities when dealing with overlapping contexts. Global consistency, on the other hand, refers to the existence of a unified probabilistic description in the sense of Def. 4. This interpretation has a very strong topological flavor, which is reinforced by the following result.

Theorem 1 (Vorob'ev, 1963)**.** *All nondisturbing behaviours for an acyclic scenario are also noncontextual.*

Proof. In an acyclic scenario $(X,\mathcal{C},O)$, it is always possible to define an enumeration for $\mathcal{C}$, $\mathcal{C} = \{C_1,\dots,C_{|\mathcal{C}|}\}$, for which, for all $i \in [|\mathcal{C}|]$ there is $j \in [|\mathcal{C}|]$, $j < i$, such that $C_i \cap (C_1 \cup \cdots \cup C_{i-1}) = C_i \cup C_j$. Let $|\mathcal{C}| = n$. For $n = 1$, any behaviour is clearly NC. We then proceed by induction on n. So, we assume that for a scenario in which $|\mathcal{C}| < n$, ND implies NC. Let $(X,\mathcal{C},O)$ be a scenario with $\mathcal{C} = \{C_1,\dots,C_n\}$. From the induction hypotheses, for all ND behaviour $\{p_i \in \mathrm{Prob}(O^{C_i}) : i \in [n]\}$, there exists $p \in \mathrm{Prob}(O^{C_1\cup\cdots\cup C_{n-1}})$ such that $p|_{C_i} = p_i$, for all $i \in [n-1]$. Let $\tilde{p} : O^X \to \mathbb{R}^+$

$$\tilde{p}(t) = \frac{p(t|_{C_1\cup\cdots\cup C_{n-1}})\,p_n(t|_{C_n})}{p_n|_{C_n\cap C_j}(t|_{C_n\cap C_j})},$$

if $p_n|_{C_n\cap C_j}(t|_{C_n\cap C_j}) > 0$, and $\tilde{p}(t) = 0$ otherwise, where $j \in [n-1]$ such that $C_n \cap C_j = C_n \cap (C_1 \cup \cdots \cup C_{n-1})$. It is easy to verify that $\tilde{p}$ is actually a probability distribution over O^X. Moreover, $\tilde{p}|_{C_1\cup\cdots\cup C_{n-1}} = p$ and $\tilde{p}|_{C_n} = p_n$. In other words, $\tilde{p}$ reproduces $\{p_i \in \mathrm{Prob}(O^{C_i}) : i \in [n]\}$ by marginals, and then it is a NC behaviour[1]. ∎

According to Ref. [46], the theorem above was first stated without a proof by N. Vorob'ev in Ref. [48], and subsequently explicitly proven by N. N. Vorob'yev in Ref. [49]. In some sense it states that the n-cycle scenarios are the simplest ones to exhibit contextuality. This result and the interpretation of contextuality as the impossibility of consistent global descriptions suggest a topological meaning for it. Indeed, in Ref. [50], the author puts forward an entirely topological approach, based on the concept of probability fibre bundle, from which these mentioned results

[1] This proof was based in Ref. [46]. An alternative proof using Graham reduction is presented in Ref. [47].

(among other ones) can be derived. Moreover, in Ref. [51] the authors investigated how to use cohomological obstructions as witnesses of contextuality.

We then conclude in this section that contextuality has a very clear mathematical foundation. The physical meaning of Def. 5, on the other hand, is yet not so clear. In the next section we aim to understand the counterintuitive aspects of this concept, which is related with a proper notion of (non-)classicality.

1.2. Classical Models and Noncontextuality

Herein we aim to construct the notion of classicality considered in this work, and understanding its connection with (non-)contextuality. For that, we will consider a broad-class of models, which we call *ontological models*, whose goal is to reproduce the statistics of a given behaviour. As Bell first noted in his seminal paper [6], classicality can be understood as a restriction on this class of models.

The experimental procedures we consider always consist of preparation followed by one or more measurements. We assume that two identical physical systems prepared in the same way always exhibit the same statistics for every measurement context. So, we may say that the preparation of a physical system attaches to it a state, which we call an *ontic state*. The measurement devices, in turn, act on the system in a certain ontic state returning a joint outcome.

The preparation of a physical system means to prepare it in some ontic state. However, the procedure may not be deterministic, *i.e.* it may only fix the probabilities that the system be in different ontic states. Thus, we assume that each preparation procedure is associated to a probability measure on the space of ontic states, which we suppose to be a measurable space. Measurement procedures, in turn, are associated to functions that define how the model assigns values to the observable quantities. These two ingredients define an *ontological model* (OM).

Definition 6. Given a scenario $(X, \mathcal{C}, O)$, an *ontological model* for a behaviour $\mathrm{B} = \{p_C \in \mathrm{Prob}(O^C) : C \in \mathcal{C}\}$ is defined by a probability space (Ω, Σ, μ) and a collection of measurable functions $\xi_C : O^C \times \Omega \to \mathbb{R}^+$, one for each $C \in \mathcal{C}$, such that

$$\sum_{s \in O^C} \xi_C(s, \lambda) = 1, \tag{1.3}$$

for all $\lambda \in \Omega$, and

$$p_C(s) = \int_\Omega \xi_C(s, -)\, \mathrm{d}\mu, \tag{1.4}$$

for all $C \in \mathcal{C}$ and $s \in O^C$.

It is straightforward to verify that every behaviour can be realized by some OM. In more general frameworks (*cf.* Refs. [20, 52]) OM are defined by assignment rules in preparations, transformations, and measurements procedures. In Def. 6, in turn, all information about preparation and possible transformation in the system is encoded in the probability space. Thus, the properties of those OM are defined by the properties of the functions ξ_C. These functions tell how the model assigns values to the observable quantities associated to measurements in the context C. Moreover, from Eq. (1.3), $\xi_C(s, \lambda)$ can be understood as the probability of the joint outcome $s \in O^C$ be produced given the ontic state λ.

In some cases, the same observable can be measured in different contexts. In these cases, it seems quite reasonable to assume that the assignment of value to the observable is independent of the choice of which others will be measured together. In other words, we assume that the process for which the measurement apparatus assigns a value to an observable depends only on the prepared ontic state and not on the chosen measurement context. An ontological model with this property is said to be noncontextual (NC). More precisely, we say that an ontological model for a given behaviour for a scenario $(X, \mathcal{C}, O)$ is NC if the functions ξ_C are factorizable, *i.e.* there exists a family of measurable functions $\xi_m : O \times \Omega \to \mathbb{R}^+$, one for each $m \in X$, such that

$$\sum_{o \in O} \xi_m(o, \lambda) = 1, \tag{1.5}$$

and

$$\xi_C(s, \lambda) = \prod_{m \in C} \xi_m(s(m), \lambda), \tag{1.6}$$

for all $\lambda \in \Omega$, $C \in \mathcal{C}$, and $s \in O^C$.

Another property that may be required for ontological models is *outcome determinism* (also called *realism*). This assumption states that properties of physical systems are completely defined by preparations, and measurement procedures just revel their values to the experimenter. If we assume outcome determinism, it seems quite reasonable to require NC as well. In fact, since the values of the observables are fixed in the preparation, it is quite reasonable to assume that this procedure is independent of the choice of which contexts will be considered. Otherwise, one may ask: how does the preparation device (or the physical system) knows which context was (or will be) chosen by the experimenter? Since this is a difficult question, here we will avoid someone asking it by assuming NC whenever we assume realism.

The problem becomes more dramatic when dealing with Bell scenarios. In fact, in these cases, NC is the content of Bell's locality assumption: each part of a multipartite physical system has predefined properties whose values are independent of the choice of measurement in other parts. Otherwise, the value of a local observable in Alice's part, for instance, depends on the choice of which measurements will be performed by Bob. However, this means an infinite velocity interaction (since we can consider the parts as separated as we want) between Bob's measurement apparatus and Alice's part of the physical system, which contradicts one of the basic postulates of special relativity.

So far an implicit consideration in our discussion is the possibility to choose measurement contexts at random. This assumption is usually called *free will*. In short, free will means that the experimenter's decision is not governed by any deterministic theory[2]. In our discussion, free will assumption reads as statistical independence between the prepared ontic state and the choice of measurement context. A model that consider some of this kind of statistical dependence is usually called *superdeterministic* [54]. In what follows, we will only consider models compatible with free will.

A classical model is an attempt to reproduce the statistics of a given behaviour by a model compatible with our daily intuition on probabilities and measurements. By using the terms of the above discussion, a classical model is one compatible with realism, NC, and free will.

[2]Notice that this concept is *not* equivalent to the theological notion of "free will". In Proverbs 16:9, for instance, God said: "The heart of man plans his way, but the Lord establishes his steps" [53].

Definition 7. A *classical model* for a compatibility scenario $(X, \mathcal{C}, O)$ is defined by a probability space (Ω, Σ, μ), and, for each $m \in X$, a partition of Ω into $|O|$ disjoint measurable sets, *i.e.* $\omega_m := \{\omega_{m;\,o} \in \Sigma : o \in O\}$ such that $\cup_{o \in O} \omega_{m;\,o} = \Omega$ and $\omega_{m;\,o} \cap \omega_{m;\,\tilde{o}} = \emptyset$ whenever $o \neq \tilde{o}$. The probability of obtain a joint outcome $s \in O^C$ will be

$$p_C(s) = \mu\Big(\bigcap_{m \in C} \omega_{m;\,s(m)}\Big). \tag{1.7}$$

A behaviour B whose probability distributions are defined by (1.7) is called a *classical behaviour*.

Since classical models are a particular type among the possible ones, it is expected that not all behaviours can be classically realized. In fact, as first pointed by A. Fine [39] and later generalized by Abramsky-Brandenburger [17], NC (in the sense of Def. 4) is a necessary and sufficient condition for classicality.

Theorem 2 (Fine-Abramsky-Brandenburger, 2011)**.** *A behaviour is classical if, and only if, it is NC.*

Proof. Let $\mathrm{B} := \{p_C \in \mathrm{Prob}(O^C) : C \in \mathcal{C}\}$ be a classical behaviour for a scenario $(X, \mathcal{C}, O)$. So, there exists a probability space (Ω, Σ, μ) and, for each $m \in X$, a partition of Ω into $|O|$ disjoint measurable sets, $\omega_m := \{\omega_{m;\,o} : o \in O\}$, such that

$$p_C(s) = \mu\Big(\bigcap_{m \in C} \omega_{m;\,s(m)}\Big) = \int_\Omega \prod_{m \in C} \chi_{\omega_{m;\,s(m)}}\, \mathrm{d}\mu,$$

where χ denotes the characteristic function. Defining $p : O^X \to \mathbb{R}^+$,

$$p(t) := \mu\Big(\bigcap_{m \in X} \omega_{m;\,t(m)}\Big) = \int_\Omega \prod_{m \in X} \chi_{\omega_{m;\,t(m)}}\, \mathrm{d}\mu,$$

it follows that

$$\sum_{t \in O^X} p(t) = \sum_{t \in O^X} \int_\Omega \prod_{m \in X} \chi_{\omega_{m;\,t(m)}}\, \mathrm{d}\mu = \int_\Omega \sum_{t \in O^X} \prod_{m \in X} \chi_{\omega_{m;\,t(m)}}\, \mathrm{d}\mu = \int_\Omega \prod_{m \in X} \sum_{o \in O} \chi_{\omega_{m;\,o}}\, \mathrm{d}\mu = 1,$$

i.e. p is a probability distribution over O^X. Moreover, for all $C \in \mathcal{C}$ and $s \in O^C$,

$$\begin{aligned}
p|_C(s) = \sum_{t \in O^X : t|_C = s} p(t) &= \sum_{t \in O^X : t|_C = s} \int_\Omega \prod_{m \in X} \chi_{\omega_{m;\,t(m)}}\, \mathrm{d}\mu \\
&= \int_\Omega \sum_{t \in O^X : t|_C = s} \prod_{m \in X} \chi_{\omega_{m;\,t(m)}}\, \mathrm{d}\mu \\
&= \int_\Omega \prod_{m \in C} \chi_{\omega_{m;\,s(m)}} \prod_{m \in X \setminus C} \sum_{o \in O} \chi_{\omega_{m;\,o}}\, \mathrm{d}\mu \\
&= \int_\Omega \prod_{m \in C} \chi_{\omega_{m;\,s(m)}}\, \mathrm{d}\mu \\
&= p_C(s),
\end{aligned}$$

i.e. B is NC. Now suppose B NC. So, there exists a probability distribution p over O^X such that

$$p_C(s) = \sum_{t \in O^X \,:\, t|_C = s} p(t),$$

for all $C \in \mathcal{C}$ and $s \in O^C$. If one defines $\omega_{m;\, s(m)} := \{t \in O^X : t(m) = s(m)\}$, for all $m \in X$, $\Omega = O^X$, $\Sigma = \mathcal{P}(O^X)$, and $\mu = p$, it follows that

$$p_C(s) = \int_\Omega \prod_{m \in C} \chi_{\omega_{m;\, s(m)}} \, \mathrm{d}\mu = \mu\Big(\bigcap_{m \in C} \omega_{m;\, s(m)} \Big),$$

meaning that B is classical. ■

In summary, we conclude that a contextual behaviour is incompatible with the notion of measurement as procedures that revel pre-defined systems properties whose values are independent of the choice of context. The intuition provided by the above theorem will be very useful throughout this work, and will be used even without explicit citation.

In a NC ontological model, every measurement $m \in X$ is associated with a response function ξ_m, which is independent of the context(s) that m belongs to. Since we are only considering ND behaviours, the probability distributions associated to m are also context independent. In other words, a NC ontological model associates equivalent observed probabilities to equivalent response functions in the model. This observation is at the core of the *generalized contextuality* proposed by R. Spekkens in Ref. [20]. In such a contribution, the author defines NC ontological models as those for which equivalent probabilities are associated to equivalent representations in the model. This notion is "generalized" because it can also be applied to preparations, transformations, and non-ideal (or unsharp) measurements.

1.3. Noncontextuality Inequalities

The task of deciding whether a given behaviour is contextual may be quite difficult if one tries to accomplish it by building a global distribution (in the sense of Def. 5) by "trial and error". This naive strategy is indeed impracticable even for scenarios with few measurements. A more refined strategy uses the geometry of the NC set to provide a simple criteria for contextuality. In particular, the fundamental observation is that the NC set is a *convex polytope*.

A convex polytope can be defined as the convex hull of a finite number of points in some $\mathbb{R}^n$. These points are called the *vertices*, and they are the unique ones that cannot be written as nontrivial[3] convex sums of other points of the polytope. The dimension of a convex polytope is defined as the maximum number of independent vertices, and we say that it is *full-dimensional* if it is an n-dimensional object in $\mathbb{R}^n$.

Alternatively, a convex polytope can be completely defined as the bounded intersection of a finite number of closed halfspaces. A representation in terms of halfspaces is called an H-representation. There exist infinitely many possible H-descriptions of a given convex polytope. However, for a full-dimensional one, the minimal H-description is in fact unique, and the associated halfspaces are called *facet-defining*. The equivalence between the representations in terms of halfspaces and in terms of vertices is the content of Minkowski-Weyl theorem [55].

[3] A trivial convex sum is one in which one of the terms is equal to the unity.

Every behaviour $\mathrm{B} = \{p_C \in \mathrm{Prob}(O^C) : C \in \mathcal{C}\}$ for a scenario $(X, \mathcal{C}, O)$ can be represented by a vector $\mathbf{p} \in \mathbb{R}^d$,

$$d := \sum_{C \in \mathcal{C}} |O^C|,$$

whose entries are probabilities $p_C(s)$. Since convex sums of probability distributions are also probability distributions, the set of all behaviours for a scenario is convex. Moreover, this set is a convex polytope with

$$\prod_{C \in \mathcal{C}} |O^C|$$

vertices. ND and NC sets are also convex polytopes. In fact, for the former it is enough to notice that ND condition [Eq. (1.1)] provides a set of linear constrains, while for the latter it follows from the fact that every probability distribution of a NC behaviour B can be written as

$$p_C(s) = \sum_{t \in O^X : t|_C = s} p(t) = \sum_{t \in O^X} \delta_C(t,s) p(t), \tag{1.8}$$

where p is a probability distribution over O^X, and

$$\delta_C : O^X \times O^C \to \{0,1\} \quad :: \quad (t,s) \mapsto \begin{cases} 1 & \text{if } t|_C = s \\ 0 & \text{otherwise} \end{cases} . \tag{1.9}$$

For each $t \in O^X$, define B_t as the deterministic ND behaviour whose probability distributions are $p_C(s) = \delta_C(t,s)$. From Eq. (1.8), one can see that every NC behaviour is a convex sum of ND deterministic ones. Moreover, each B_t cannot be written as a nontrivial convex sum of other NC behaviours. Hence, the NC set is also a convex polytope with $|O^X|$ vertices.

From the above discussion we conclude that the vertices of the NC polytope are the deterministic ND behaviours, and only those. So, to verify whether a given behaviour B, whose vector representation is $\mathbf{p}$, is NC can be transformed into the following feasibility problem:

$$\begin{aligned} \text{Find} \quad & \mathbf{d} \in \mathbb{R}^{|O^X|} \\ \text{Subject to} \quad & \mathbf{p} = \mathbf{M}\mathbf{d} \\ \text{and} \quad & \mathbf{1} \cdot \mathbf{d} = 1 \\ & \mathbf{d} \geq \mathbf{0} \end{aligned} , \tag{1.10}$$

where $\mathbf{1} := (1, \ldots, 1)^T \in \mathbb{R}^{|O^X|}$, and $\mathbf{M}$ is a $\sum_{C \in \mathcal{C}} |O^C| \times |O^X|$ Boolean matrix whose entries are $\delta_C(t,s)$, for each $C \in \mathcal{C}$, $t \in O^X$, and $s \in O^C$. We call $\mathbf{M}$ the *incidence matrix* of the scenario[4]. This representation is particularly useful as it provides an algorithm for determining if a given behaviour B exhibit non-classicalities [17,56,57]. In fact, (1.10) is a typical instance of a linear programming problem for which there exist algorithms that run in time that is polynomial in the number of variables [58]. However, it is not so since the incidence matrix grows exponentially in the complexity of the scenario[5].

[4]Notice that $\mathbf{M}$ is completely defined by the scenario.

[5]For a Bell scenario (n,k,ℓ), for instance, the size of $\mathbf{M}$ is $(k\ell)^n \times \ell^{kn}$.

Every linear program comes in a primal and a dual form. The dual form of the linear program in Eq. (1.10) is [15]

$$\begin{aligned} \text{Maximize} \quad & \boldsymbol{\gamma}\cdot\mathbf{p} - S \\ \text{Subject to} \quad & \mathbf{M}^T\boldsymbol{\gamma} - S\cdot\mathbf{1} \leq 0 \quad , \\ \text{and} \quad & \boldsymbol{\gamma}\cdot\mathbf{p} - S \leq 1 \end{aligned} \tag{1.11}$$

where in the dual program above we input a behaviour $\mathbf{p}$ and an incidence matrix $\mathbf{M}$ and obtain the pair $(\boldsymbol{\gamma}, S) \in \mathbb{R}^d \times \mathbb{R}$, $d = \sum_{C\in\mathcal{C}} |O^C|$, as output. If $\mathbf{p}$ is NC the maximum of $\boldsymbol{\gamma}\cdot\mathbf{p} - S$ is non-positive, otherwise the maximum is equal to one. In fact, from Eq. (1.10), if $\mathbf{p}$ is NC, there exists $\mathbf{d} \in \mathbb{R}^{|O^X|}$ such that $\mathbf{p} = \mathbf{M}\mathbf{d}$ and $\mathbf{1}\cdot\mathbf{d} = 1$. Hence, the first constrain in Eq. (1.11) implies that $\boldsymbol{\gamma}\cdot\mathbf{p} - S \leq 0$. If, instead, $\mathbf{p}$ is contextual, the separation theorem for convex sets implies the existence an affine halfspace, $\{\boldsymbol{x} \in \mathbb{R}^d : \boldsymbol{\gamma}\cdot\boldsymbol{x} = S\}$, that separates $\mathbf{p}$ from the NC polytope. That is, for each $\mathbf{p}$ contextual, there exists a pair $(\boldsymbol{\gamma}, S)$ such that $\boldsymbol{\gamma}\cdot\mathbf{p} - S > 0$ and $\mathbf{M}^T\boldsymbol{\gamma} \leq S\cdot\mathbf{1}$. In this case, the maximum is thus strictly positive and the only remaining constrain is: $\boldsymbol{\gamma}\cdot\mathbf{p} - S \leq 1$. Therefore, the maximum is equal to one[6].

In other words, if a given behaviour $\mathbf{p}$ is contextual, the program (1.11) returns a linear inequality satisfied by all NC behaviour but violated by $\mathbf{p}$. Such inequalities are called noncontextuality inequalities (NCI).

Definition 8. A *noncontextuality inequality* for a scenario $(X, \mathcal{C}, O)$ is a linear inequality

$$\boldsymbol{\gamma}\cdot\mathbf{p} := \sum_{C\in\mathcal{C};\, s\in O^C} \gamma_{C;\,s}\, p_C(s) \leq S, \tag{1.12}$$

$S, \gamma_{C;\,s} \in \mathbb{R}$, satisfied by all noncontextual behaviour. If there exists some noncontextual behaviour such that the equality in (1.12) holds, then the NCI is said to be *tight*.

Remark. When dealing with Bell scenarios, a NCI is usually called a *Bell inequality*.

The duality in linear programming of detecting contextuality reflects the duality in the representation of the NC polytope. In this sense, a simple criteria to verify the occurrence of non-classicalities is provided by a set of tight NC inequalities that provides an H-representation of the NC polytope. In particular, the full-dimensional one is highly desirable. However, although verifying either a given behaviour satisfies all NC inequalities of an H-representation is simple, to find such inequalities may be quite difficult. In fact, only for few scenarios such a problem is completely solved, for instance: the 3-cycle [59], 4-cycle [39], 5-cycle [14, 60], odd-cycle [45, 61], n-cycle [62], and some bipartite Bell scenarios [15].

Example 4 (n-cycle Inequalities)**.** It was shown in Ref. [62] that for an n-cycle scenario, with $X = \{M_1, \ldots, M_n\}$ and $O = \{0, 1\}$, there exist 2^{n-1} tight NC inequalities, and they are of the form

$$\sum_{i=1}^{n} \gamma_i \langle M_i M_{i+1}\rangle \leq n-2, \tag{1.13}$$

where $\langle M_i M_{i+1}\rangle := p_i(0,0) + p_i(1,1) - p_i(1,0) - p_i(0,1)$, p_i denotes the probability distribution associated with the context $\{M_i, M_{i+1}\}$, the sum is taken modulo n, $\gamma_i \in \{-1, +1\}$, and the number of indices i such that $\gamma_i = -1$ is odd.

[6] We follow the convention of Ref. [16] in Eq. (1.11) inserting the constrain: $\boldsymbol{\gamma}\cdot\mathbf{p} - S \leq 1$. But notice that we are free to replace it by $\boldsymbol{\gamma}\cdot\mathbf{p} - S \leq \phi$ for any $\phi > 0$.

In summary, we conclude that the geometry of the NC set is very useful in the detection of non-classicalities. In particular, the fact that this is a convex polytope allows efficient algorithms for this task. In general, the problem we have is to find an H-representation given the set of vertices. For sufficiently simple cases, it is possible to solve such a problem by using computational codes such as PORTA, which is based on the so-called Fourier-Motzkin elimination [55]. Even so, the fact that the incidence matrix grows exponentially with the complexity of the scenario makes the problem of determining NC or Bell inequalities still an object of research today.

1.4. Quantum Models and Quantum Behaviours

Let us now focus on sets of probability distributions realized by quantum theory. The quantum mechanical description of a physical system attaches to each preparation procedure a *quantum probability space*, which is a pair $(\rho, \mathcal{H})$, where $\mathcal{H}$ is a complex and separable Hilbert space, and ρ is a density operator on $\mathcal{H}$. A quantum model for a behaviour is defined by a quantum probability space together with projective representations for the measurements. The probabilities, in turn, are obtained from Born's rule.

Definition 9. A *quantum model* for a behaviour $\mathrm{B} = \{p_C \in \mathrm{Prob}(O^C) : C \in \mathcal{C}\}$ for a scenario $(X, \mathcal{C}, O)$ is defined by a quantum probability space $(\rho, \mathcal{H})$, and, for each $m \in X$, a partition of the identity of $\mathcal{H}$ into $|O|$ orthogonal projectors, *i.e.* a collection of orthogonal projectors $\{\mathrm{P}_{m;\,o} : o \in O\}$ such that

$$\sum_{o \in O} \mathrm{P}_{m;\,o} = \mathbb{I}_{\mathcal{H}}.$$

We require that $[\mathrm{P}_{m;\,o}, \mathrm{P}_{\tilde{m};\,\tilde{o}}] = 0$, for all $o, \tilde{o} \in O$, whenever m and $\tilde{m}$ belong to the same context. The probability of obtain a joint outcome $s \in O^C$ will be

$$p_C(s) = \mathrm{Tr}\Big(\prod_{m \in C} \mathrm{P}_{m;\,s(m)}\, \rho\Big) \tag{1.14}$$

A behaviour B whose probabilities are defined by (1.14) is called a *quantum behaviour*.

The set of quantum behaviours (or simple the quantum set) has very interesting properties. The first one we will focus is in its convexity.

Proposition 3. *The quantum set is convex.*

Proof. Let B and B′ be two quantum behaviours for a scenario $(X, \mathcal{C}, O)$, respectively realized within the quantum probability spaces $(\rho, \mathcal{H})$ and $(\rho', \mathcal{H}')$, and, for all $m \in X$, the orthogonal projectors $\{\mathrm{P}_{m;\,o} : o \in O\}$ and $\{\mathrm{P}'_{m;\,o} : o \in O\}$. Given $\lambda \in [0,1]$, $C \in \mathcal{C}$, and $s \in O^C$ we have

$$\begin{aligned}
\lambda p_C(s) + (1-\lambda) p'_C(s) &= \lambda \mathrm{Tr}\Big(\prod_{m \in C} \mathrm{P}_{m;\,s(m)}\, \rho\Big) + (1-\lambda)\mathrm{Tr}\Big(\prod_{m \in C} \mathrm{P}'_{m;\,s(m)}\, \rho'\Big) \\
&= \mathrm{Tr}\Big(\lambda \prod_{m \in C} \mathrm{P}_{m;\,s(m)}\, \rho \oplus (1-\lambda) \prod_{m \in C} \mathrm{P}'_{m;\,s(m)}\, \rho'\Big) \\
&= \mathrm{Tr}\Big[\Big(\prod_{m \in C} \mathrm{P}_{m;\,s(m)} \oplus \mathrm{P}'_{m;\,s(m)}\Big)\big(\lambda\rho \oplus (1-\lambda)\rho'\big)\Big].
\end{aligned} \tag{1.15}$$

Therefore, the convex sum of the quantum behaviours B and B′ is another quantum behaviour realized with the quantum probability space $(\mathcal{H}\oplus\mathcal{H}', \lambda\rho\oplus(1-\lambda)\rho')$, and the following set of orthogonal projections $\{\mathrm{P}_{m;\,o}\oplus\mathrm{P}'_{m;\,o} : o\in O\}$. ■

An important point in the above demonstration is that we do not restrict the dimension of the Hilbert spaces in the realization. If we bound the Hilbert space dimensions by any finite number, then the resulting quantum set is not necessarily convex, as demonstrated by Pál-Vértesi in bipartite Bell scenarios [63].

Another interesting property of quantum sets is that it has the classical set as a subset.

Proposition 4. *The classical set is a subset of the quantum one.*

Proof. Just notice that every deterministic ND behaviour can be realized by a quantum model with any quantum probability space $(\mathcal{H},\rho)$ and orthogonal projectors $\mathrm{P}_{m;\,s(m)} = \delta_C(t,s)\mathbb{I}_{\mathcal{H}}$. Therefore, the claim follows from the convexity of both quantum and classical sets. ■

Finally, another important fact about quantum behaviours is that they obeys the ND condition [Eq. (1.1)].

Proposition 5. *The set of quantum behaviours is a subset of the ND one.*

Proof. For a quantum behaviour realized by the quantum probability space $(\mathcal{H},\rho)$ and the projectors $\{\mathrm{P}_{m;\,o} : o\in O, m\in X\}$, it follows that

$$\begin{aligned}
p_C|_{C\cap C'}(s) = \sum_{t\in O^C\,:\,t|_C=s} p_C(t) &= \sum_{t\in O^C\,:\,t|_C=s} \mathrm{Tr}\Big(\prod_{m\in C}\mathrm{P}_{m;\,t(m)}\,\rho\Big)\\
&= \mathrm{Tr}\Big(\sum_{t\in O^C\,:\,t|_C=s}\prod_{m\in C}\mathrm{P}_{m;\,t(m)}\,\rho\Big)\\
&= \mathrm{Tr}\Big(\prod_{m\in C\cap C'}\mathrm{P}_{m;\,s(m)}\sum_{t\in O^C\,:\,t|_C=s}\prod_{m\in C\setminus C\cap C'}\mathrm{P}_{m;\,t(m)}\,\rho\Big)\\
&= \mathrm{Tr}\Big(\prod_{m\in C\cap C'}\mathrm{P}_{m;\,s(m)}\prod_{m\in C\setminus C\cap C'}\sum_{o\in O}\mathrm{P}_{m;\,o}\,\rho\Big)\\
&= \mathrm{Tr}\Big(\prod_{m\in C\cap C'}\mathrm{P}_{m;\,s(m)}\,\rho\Big).
\end{aligned}$$

Since the product of projectors in the right-hand side depends only on those associated with measurements in the intersection $C\cap C'$, it follows that $p_C|_{C\cap C'}(s) = p_{C'}|_{C\cap C'}(s)$, for all $C, C'\in\mathcal{C}$ and $s\in O^{C\cap C'}$. ■

Therefore, we conclude that the quantum set is larger or equal than the classical set but smaller or equal than the ND set. In general, both inclusions are strictly, meaning that the classical set is a proper subset of the quantum set and this, in turn, is a proper subset of ND one. In other words, the set of quantum probabilities can exhibit non-classical properties, but it is not complete described by ND condition only. The former fact will be discussed in the following section of this chapter, and the latter will be discussed in the next chapter when we present PR-boxes and the concept of strong contextuality.

1.5. Bounding the Set of Quantum Probabilities

The set of quantum behaviours for a given scenario is convex [Proposition 3], but in general it is not a polytope. Thus, its characterization can be significantly hard than the classical set, and to extract geometric information of such a set is not a trivial task. In fact, we do not have good intuition about what the quantum set actually looks like. The first attempts to systematically study geometric aspects of quantum sets dated mainly less than five years (*cf.* Refs. [64–66], for nonlocality; and Ref. [67] for contextuality).

When we mention that the quantum set is convex but not a polytope, we mean that its boundary is not composed by segments of hyperplanes but rather convex curved hypersurfaces. The most famous example of curved boundary of the quantum set is the TLM boundary (due to Tsirelson [68], Landau [69], and Masanes [70]), which is defined in the CHSH scenario in the slice with unbiased marginals (*i.e.* with zero expectation value for all observables). In the full-dimensional representation of the local polytope [62], above the CHSH facet defined by

$$\langle M_1 M_2\rangle + \langle M_2 M_3\rangle - \langle M_3 M_4\rangle + \langle M_4 M_1\rangle = 2, \tag{1.16}$$

the TLM boundary equation reads [15]

$$\arcsin\langle M_1 M_2\rangle + \arcsin\langle M_2 M_3\rangle - \arcsin\langle M_3 M_4\rangle + \arcsin\langle M_4 M_1\rangle = \pi, \tag{1.17}$$

and, for the boundary above any of the other facets, one has to apply the corresponding permutations.

Additionally to the difficulties in its geometric characterization, to decide whether a given behaviour is or not in the quantum set is also very difficult. However, it is possible to numerically approximate the quantum set by a hierarchy of sets that can be efficiently implemented by means of semi-definite programs. This has been known as the NPA hierarchy, named after the pioneering works of M. Navascués, S. Pironio, and A. Acín [71, 72]. In this hierarchy, the quantum set $\mathcal{Q}$ is approximated by sets $\mathcal{Q}_n$ such that $\mathcal{Q} \subseteq \mathcal{Q}_{n+1} \subseteq \mathcal{Q}_n$, for all $n \in \mathbb{N}$, in such a way that $\mathcal{Q}_n \to \mathcal{Q}$ when $n \to \infty$. More details on NPA hierarchy can be found in several references including the original papers, Refs. [71,72], in the textbook of Ref. [15], and in the Refs. [73,74].

As mentioned above, a given quantum behaviour can exhibit non-classicalities, which is manifested by the violation of some NC (or Bell) inequality [Sec. 1.3]. The maximum value allowed by quantum theory for a given NCI defines its *Tsirelson bound*, due to important contribution of Tsirelson [75].

Example 5 (n-cycle Tsirelson Value)**.** It was shown in Ref. [62] that the Tsirelson bound for the n-cycle NCIs [Eq. (1.13)] is

$$\begin{cases} \dfrac{3n\cos(\pi/n) - n}{1+\cos(\pi/n)} & \text{if } n \text{ is odd} \\ n\cos(\pi/n) & \text{if } n \text{ is even} \end{cases}, \tag{1.18}$$

which is strictly smaller that n, the algebraic bound of the inequality.

In general, to compute analitically a Tsirelson bound, such as in Eq. (1.18), is a difficult task. In fact, what is usually done are estimates of such a value numerically, using mainly NPA hierarchy [15, 16], and/or graph theoretic bounds [19].

Another possible direction of investigation on the sets of quantum probabilities consists of seek a set of principles that separate the set of quantum probabilities from the other ones. Recent progresses in this directions include information causality principle [77], local ortogonality [78], and its generalization, the exclusivity principle [79–81]. None of these strategies, however, work for all possible scenarios, and finding one or more principles fully explaining quantum probabilities is still an open problem.

1.6. CSW Graph Theoretic Approach

CSW graph theoretic approach, named after Cabello-Severini-Winter contribution [18], is one of the most important recent insights on characterization of contextuality and nonlocality. Such a formalism is based on the so-called *exclusivity graph*, which is a graph associated to the compatibility hypergraph of a scenario from which several bounds [including the Tsirelson bound of Eq. (1.18)] can be obtained.

Definition 10. Given a scenario $(X, \mathcal{C}, O)$, two measurement events, $s|C$ and $\tilde{s}|\tilde{C}$, are said to be *exclusive* if $C \cap \tilde{C} \neq \emptyset$ and $s|_{C\cap\tilde{C}} \neq \tilde{s}|_{C\cap\tilde{C}}$. The *exclusivity graph* of the scenario is the simple graph whose vertices are measurement events and there is a edge connecting two vertices if, and only if, the corresponding measurement events are exclusive.

NCIs in general do not use all the probabilistic information of the behaviour. With this in mind, we define the exclusivity graph of a NCI as follows.

Definition 11. The exclusivity graph of a NCI is defined to be the subgraph of the exclusivity graph of the scenario induced by the measurement events of the inequality.

The CSW results state bounds on NCIs based on properties their exclusivity hypergraph.

Definition 12. Given a simple graph G, we define:

(1) The *independence number*, $\alpha(\mathrm{G})$, as the maximum number of independent vertices;

(2) The *Lovász number* [76], $\vartheta(\mathrm{G})$, as

$$\vartheta(\mathrm{G}) = \sup \sum_{i\in \mathrm{V(G)}} |\langle i|\psi\rangle|^2 \tag{1.19}$$

where the supremum is taken over all vector spaces V, all orthogonal representations $\{|i\rangle : i \in \mathrm{V(G)}\}$ for $\bar{\mathrm{G}}$, and all unit vectors $|\psi\rangle \in V$.

Theorem 6 (Cabello-Severini-Winter, 2010)**.** *If* G *is the exclusivity graph of a NCI S, then* $S \leq \alpha(\mathrm{G})$ *in the NC set and* $S \leq \vartheta(\mathrm{G})$ *in the quantum set.*

An orthonormal representation achieving the supremum in Eq. (1.19) is called an optimal orthonormal representation. CSW also shown in their paper that such an optical representation always exists [18], *i.e.* given $\vartheta(\mathrm{G})$ it is always possible to construct a quantum behaviour and a NCI such that $S = \vartheta(\mathrm{G})$. This result, however, is true if the compatibility hypergraph is not fixed but only the exclusivity one. In the case where the scenario is fixed (such as occurs when we look at a NCI) Lovasz number in general provides an upper-bound for the Tsirelson bound.

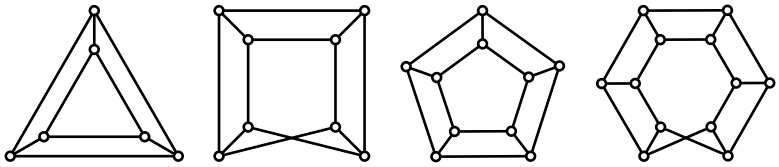

Figure 1.4: Exclusivity graphs for the n-cycle NCI [Eq. (1.13)].

The most notable example of a NCI inequality where the bound provided by the Lovasz number is achieved is the n-cycle inequalities [62]. The exclusivity graph of such inequalities are prism graphs for n odd and Möbius ladders for n even [Fig. 1.4]. The corresponding Lovasz number of such graphs are presented in Eq. (1.18).

Further developments on such CSW graph approach, including a recent proposed multigraph approach [82] (but not the multicolored-graph approach [83]), can be found in the textbook of Ref. [19] and in the (in preparation) review [84].

Chapter 2
Possibilistic Contextuality and Nonlocality

In this chapter we aim to investigate global inconsistencies that can arise from the possibilistic structure of probabilistic data. In other words, we are interested in the possibilistic version of contextuality, called *logical contextuality* (LC). This type of nonclassicality was precisely formulated in Ref. [17]. Since then, many efforts have been done in order to understand it [85–90]. Herein we put forward the mathematical theory of LC in a presentation that emphasizes its similarities and differences with its probabilistic analogue, according to what we discuss in the previous chapter.

2.1. Logical Contextuality and Nonlocality

First of all, let us discuss how to consistently describe the possibilistic structure of probabilistic data. In particular we aim to precisely define how properties of (probabilistic) behaviours, such as nondisturbance and (non)contextuality, can be translated to a possibilistic language.

Given a compatibility scenario $(X, \mathcal{C}, O)$, we call p a *possibility distribution* for the context $C \in \mathcal{C}$ if p is a normalized function from the set of joint outcomes O^C to the Booleans $\mathbb{B} = (\{0,1\}, \vee, \wedge, \neg)$, that is $p : O^C \to \mathbb{B}$ such that

$$\bigvee_{s \in O^C} p(s) = 1. \tag{2.1}$$

As in the probabilistic case, if $U \subseteq C$ is a subset of measurements of the context C, we then define the marginal possibility distribution for U given p as

$$p|_U(u) := \bigvee_{s \in O^C \,:\, s|_U = u} p(s), \tag{2.2}$$

for all $u \in O^U$. With this definition on hand, we define the possibilistic structure of a behaviour, or its possibilistic collapse, as follows.

Definition 13. The *possibilistic collapse* of a behaviour $\mathrm{B} = \{p_C \in \mathrm{Prob}(O^C) : C \in \mathcal{C}\}$ for a scenario $(X, \mathcal{C}, O)$ is defined by the set of possibility distributions $\bar{p}_C : O^C \to \mathbb{B}$ defined by the rule

$$p_C(s) \mapsto \bar{p}_C(s) = \begin{cases} 1 & \text{if } p_C(s) > 0 \\ 0 & \text{otherwise} \end{cases} . \tag{2.3}$$

Remark. In what follows we always denote by $\bar{p}$ the possibility distribution generated by p by using the rule (2.3).

The normalization condition for the probability distributions p_C implies that each $\bar{p}_C$ is a well-defined possibility distribution over O^C. The possibilistic collapse turns a set of probability distributions into a set of possibility distributions. In other words, it provides the possibilistic structure of the behaviour. An important feature of this operation is that it "preserves" the properties discussed in the previous chapter, namely NC and ND. In fact, this is the content of the following propositions.

Proposition 7. *If a behaviour* $\mathrm{B} = \{p_C \in \mathrm{Prob}(O^C) : C \in \mathcal{C}\}$ *for a scenario* $(X, \mathcal{C}, O)$ *is ND then*

$$\bigvee_{s \in O^C : s|_{C \cap C'} = t} \bar{p}_C(s) = \bigvee_{s' \in O^{C'} : s'|_{C \cap C'} = t} \bar{p}_{C'}(s'), \tag{2.4}$$

for all $t \in O^{C \cap C'}$ *and* $C, C' \in \mathcal{C}$*, which is the possibilistic version of ND condition.*

Proof. This is a direct consequence of the ND condition [Eq. (1.1)]. ∎

Proposition 8. *If a behaviour* $\mathrm{B} = \{p_C \in \mathrm{Prob}(O^C) : C \in \mathcal{C}\}$ *for the scenario* $(X, \mathcal{C}, O)$ *is noncontextual, then there exists a possibility distribution* $\bar{p}$ *over* O^X *such that*

$$\bar{p}|_C(s) := \bigvee_{t \in O^X : t|_C = s} \bar{p}(t) = \bar{p}_C(s), \tag{2.5}$$

for all $C \in \mathcal{C}$ *and* $s \in O^C$.

Proof. This is a direct consequence of the definition of NC [Def. 4]. In fact, the possibility distribution $\bar{p}$ over O^X can be constructed taking the possibilistic collapse of $p \in \mathrm{Prob}(O^X)$ in Def. 13. ∎

Once we have a well-defined notion of ND and global possibility distributions, the definition of (non)contextuality in possibilistic sense follows immediately.

Definition 14. A behaviour $\mathrm{B} = \{p_C \in \mathrm{Prob}(O^C) : C \in \mathcal{C}\}$ for a scenario $(X, \mathcal{C}, O)$ is *logically noncontextual* if there exists a possibility distribution $\bar{p}$ over O^X reproducing the possibilistic collapse of B by marginals, that is

$$\bar{p}|_C(s) := \bigvee_{t \in O^X : t|_C = s} \bar{p}(t) = \bar{p}_C(s), \tag{2.6}$$

for all $C \in \mathcal{C}$ and $s \in O^C$. Otherwise, B is said to be *logically contextual* (LC).

Proposition 8 states that if a given behaviour is NC in probabilistic sense then it is NC in possibilistic sense. However, it should be stressed that the converse in general does not hold.

An alternative and useful characterization of LC is given by the following theorem.

Theorem 9. *A behaviour* $\mathrm{B} = \{p_C \in \mathrm{Prob}(O^C) : C \in \mathcal{C}\}$ *for the scenario* $(X, \mathcal{C}, O)$ *is LC if, and only if, there exists* $s \in O^C$*, for some* $C \in \mathcal{C}$*, such that*

(1) $p_C(s) > 0$*;*

(2) If $t \in \{g \in O^X : g|_C = s\}$ *then* $p_{C'}(t|_{C'}) = 0$ *for some* $C' \in \mathcal{C} \setminus \{C\}$.

Proof. Let $\mathrm{B} = \{p_C \in \mathrm{Prob}(O^C) : C \in \mathcal{C}\}$ be a behaviour for the scenario $(X, \mathcal{C}, O)$. First, suppose the existence of $s \in O^C$, for some $C \in \mathcal{C}$, such that the conditions 1 and 2 of the theorem hold. If $\bar{p}$ is a possibility distribution over O^X reproducing B by marginals, then condition 2 implies that $\bar{p}(t) = 0$ for all $t \in \{g \in O^X : g|_C = s\}$. However, this implies that $\bar{p}_C(s) = 0$, which contradicts the condition 1. Therefore, B is LC.

In order to prove the converse, consider the contrapositive of the statement, *i.e.* let us prove that the non-existence of such s implies logical noncontextuality. Assuming that there is no $s \in O^C$ such that the conditions of the theorem hold, then $\mathrm{Supp}(\mathrm{B}) := \{t \in O^X : p_C(t|_C) > 0, \forall\, C \in \mathcal{C}\}$ is non-empty. Let $\bar{p}$ be the possibility distribution over O^X such that $\bar{p}(t) = 1$ if $t \in \mathrm{Supp}(\mathrm{B})$, and $\bar{p}(t) = 0$ otherwise. From our assumption, for all $s \in O^C$ such that $p_C(s) > 0$, there exists $t \in \mathrm{Supp}(\mathrm{B})$ such that $t|_C = s$. Thus,

$$\bar{p}|_C(s) := \bigvee_{t \in O^X \,:\, t|_C = s} \bar{p}(t) = \bigvee_{t \in \mathrm{Supp}(\mathrm{B}) \,:\, t|_C = s} \bar{p}(t) = 1, \tag{2.7}$$

hence $\bar{p}|_C(s) = \bar{p}_C(s)$ if $p_C(s) > 0$. To the case in which $p_C(s) = 0$, there is no $t \in \mathrm{Supp}(\mathrm{B})$ such that $t|_C = s$. Thus,

$$\bar{p}|_C(s) := \bigvee_{t \in O^X \,:\, t|_C = s} \bar{p}(t) = \bigvee_{t \in O^X \setminus \mathrm{Supp}(\mathrm{B}) \,:\, t|_C = s} \bar{p}(t) = 0, \tag{2.8}$$

hence $\bar{p}|_C(s) = \bar{p}_C(s)$. Therefore, we conclude that $\bar{p}$ is a possibility distribution over O^X such that $\bar{p}|_C(s) = \bar{p}_C(s)$ for all $C \in \mathcal{C}$ and $s \in O^C$, *i.e.* B is logically NC. ∎

Theorem 9 states that LC prohibits certain pre-measurement assignments to the values of all measurable properties at once. In fact, from condition 2 of Theorem 9, any NC assignment to all measurement results would imply that $p_C(s) = 0$. Hence, it is not possible to give a noncontextual assignment to all measurements results in such a way that the joint outcome s is assigned to the measurements in context C, even though it has a non-zero probability of being observed. With this picture in mind, it is worth to introduce the following definitions.

Definition 15. Let $\mathrm{B} = \{p_C \in \mathrm{Prob}(O^C) : C \in \mathcal{C}\}$ be a behaviour for a scenario $(X, \mathcal{C}, O)$. The *support of* B is a subset of O^X defined by $\mathrm{Supp}(\mathrm{B}) := \{t \in O^X : p_C(t|_C) > 0, \forall\, C \in \mathcal{C}\}$. The elements in Supp(B) will be called *global assignments*.

By using the terms of the definition above, LC means the existence of some joint outcome with larger-than-zero probability that cannot be obtained by the restriction of any global assignment. The extreme case occurs when no global assignment is allowed, *i.e.* when for all context $C \in \mathcal{C}$ there exists $s \in O^C$ such that the conditions (1) and (2) of the Theorem 9 hold. A behaviour with this property is said to be *strongly contextual* (SC).

Definition 16. A behaviour $\mathrm{B} = \{p_C \in \mathrm{Prob}(O^C) : C \in \mathcal{C}\}$ for a scenario $(X, \mathcal{C}, O)$ is said to be *strongly contextual* if $\mathrm{Supp}(\mathrm{B}) = \emptyset$.

In a sense, SC is the most extreme form of non-classicality exhibited by a behaviour. In fact, as demonstrated by Abramsky-Brandenburger [17], given a ND behaviour B, it is always possible to find a NC behaviour B′ and a SC B″ such that

$$\mathbf{p} = (1 - \lambda)\mathbf{p}' + \lambda \mathbf{p}'' \tag{2.9}$$

	$(0,0)$	$(1,0)$	$(0,1)$	$(1,1)$
$\{A_1, B_1\}$	1	0	0	1
$\{B_1, A_2\}$	1	1	1	1
$\{A_2, B_2\}$	1	1	1	1
$\{B_2, A_1\}$	1	1	1	1

Table 2.1: Possibilistic collapse of Bell's model [Example 6].

	$(0,0)$	$(1,0)$	$(0,1)$	$(1,1)$
$\{A_1, B_1\}$	1	1	1	1
$\{B_1, A_2\}$	1	0	1	1
$\{A_2, B_2\}$	1	1	1	0
$\{B_2, A_1\}$	1	1	0	1

Table 2.2: Possibilistic collapse of Hardy's model [Example 7].

	$(0,0)$	$(1,0)$	$(0,1)$	$(1,1)$
$\{A_1, B_1\}$	1	0	0	1
$\{B_1, A_2\}$	1	0	0	1
$\{A_2, B_2\}$	1	0	0	1
$\{B_2, A_1\}$	0	1	1	0

Table 2.3: Possibilistic collapse of PR-Box [Example 8].

where $\lambda \in [0,1]$ and the bold symbols in the above equation are vector representations of the respective behaviours B, B′, and B″. The minimum λ for which a decomposition of the form of Eq. (2.9) exists is called the *contextual fraction* of the behaviour, and it is a measure of how contextual it is [17,91]. It is possible to demonstrate that the this number is equal to one only for SC [17,91]. Furthermore, such a contextuality measure plays a very important role in resource theories for contextuality, due to the fact that it is a monotone under all linear operations that preserve the NC set [92].

In order to illustrate these concepts and results, consider the "canonical" examples [17,85]: Bell's model [6], Hardy's model [26], and the Popescu-Rohrlich box (PR-Box) [93]. These are behaviours for the CHSH (4-cycle) scenario (or equivalently for the Bell scenario $(2,2,2)$). Each of these behaviours exhibit different "levels" of contextuality, namely: Bell's model is contextual but not LC; Hardy's model is LC but not SC; and PR-Box is SC. That is, we have the following qualitative hierarchy:

$$\text{Bell} < \text{Hardy} < \text{PR-Box}.$$

Example 6 (Bell's Model)**.** Proposed by Bell [6] to demonstrate that quantum mechanics predicts nonlocal correlations, Bell's model has the possibilistic structure illustrated in Table 2.1.

Example 7 (Hardy's Model)**.** Proposed by Hardy [26] in its inequality-free proof of Bell's theorem, the possibilistic structure of Hardy's model is illustrated in Table 2.2.

Example 8 (PR-Box)**.** Proposed by Popescu and Rohrlich [93] to illustrate the existence of stronger than quantum non-signaling correlations, the possibilistic collapse of PR-Box is illustrated in Table 2.3.

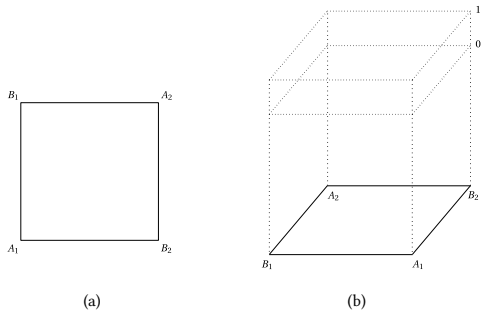

Figure 2.1: Bundle diagram for CHSH scenario.

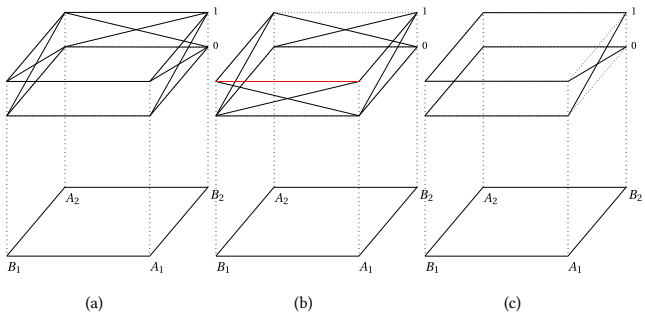

Figure 2.2: Bundle diagram for Bell's model (a); Hardy's model (b); and PR-Box (c).

The possibilistic structure of a behaviour can be visualized in its *bundle diagram* [94]. These consists of a base space formed by the compatibility hypergraph of the scenario (see Fig. 2.1 (a)) and, on top of each vertex, we added a fiber with the possible outcomes for the corresponding measurement (see Fig. 2.1 (b)). We connect two outcomes by an edge if the corresponding joint outcome is possible (*i.e.* has non-zero probability). In this diagrammatic representation, global assignments are associated to loops, *i.e.* closed paths traversing all the fibers exactly once; LC means the existence of some edge that does not belong to any loop; and SC means that no loop is allowed (see Fig. 2.2). In Bell's model (Fig. 2.2 (a)) all edges belongs to at least one loop; in Hardy's model (Fig. 2.2 (b)) one can see that the red edge does not belong to any loop; and in the PR-Box (Fig. 2.2 (c)) there is no loop.

2.2. Possibilistic Conditions to Contextuality and Nonlocality

In the Sec. 1.3 we studied the problem of determining whether a given behaviour exhibit or not non-classicalities. In the present section we will investigate the possibilistic analog of this problem. In other words, we want to find a simple criteria to decide whether a given behaviour is or not logically contextual.

As in the probabilistic case, the most naive strategy of deciding whether a given behaviour is or not logically contextual is to transform it in a feasibility problem. That is, if $\mathrm{B} = \{p_C \in \mathrm{Prob}(O^C) : C \in \mathcal{C}\}$ is a behaviour for a scenario $(X, \mathcal{C}, O)$, denote by $\bar{\mathbf{p}} \in \mathbb{B}^d$,

$$d := \sum_{C \in \mathcal{C}} |O^C|,$$

the "vector representation" of the possibilistic collapse of B, *i.e.* a list whose entries are the possibilisties of the behaviour. B is logically NC if, and only if, the following problem:

$$\begin{aligned} \text{Find} \quad & \bar{\mathbf{d}} \in \mathbb{B}^{|O^X|} \\ \text{Subject to} \quad & \bar{\mathbf{p}} = \mathbf{M}\bar{\mathbf{d}} \\ \text{and} \quad & \mathbf{1} \cdot \bar{\mathbf{d}} = 1 \end{aligned} \quad , \tag{2.10}$$

is solvable. One may indeed demonstrate that for Bell's model [Example 6], (2.10) has solution while for Hardy's model [Example 7] does not[1]. In addition, from proposition 8, (2.10) is solvable whenever (1.10) is.

The feasibility problem in Eq. (2.10) is an instance of Boolean satisfibility problem (SAT). This is notoriously difficult to solve, as it constitutes the first known instance of NP-complete problem (this is a famous result, known as Cook–Levin theorem, named after the seminal works of S. Cook [95] and L. Levin [96]). As first pointed by Mansfield-Fritz [40], the conditions proposed by Hardy in his inequality-free proof has a fundamental role in order to get around this difficulty. The fundamental idea is that the occurrence of a (small) set of possibilistic conditions is necessary and sufficient for LC, such as occurs with NC inequalities.

As already mentioned, the violation of some NCI is a simple criterion to decide whether a given behavior is or not contextual. Despite being the most usual and also quite general, this is not the only possible strategy to demonstrate the occurrence of non-classicalities. In particular, in some specific cases it is possible to demonstrate quantum contextuality without the use of any inequality, that is, an inequality-free proof.

Formally, an inequality-free proof is based on the violation of logical constrains imposed by the assumption of NC by the possibilistic structure of the behavior. Similar to what occurs in proofs based on the violation of NCIs, in general only a subset of the set of possibilities is sufficient to obtain contradictions with NC instead of the whole behaviour. Such subsets of possibilities define what we call *possibilistic paradoxes*.

Definition 17. A *possibilistic paradox* (PP) is a set of possibilistic conditions whose occurrence implies contextuality.

In a sense, the concept of PP is the possibilistic analogue of NCI. This is because the occurrence of a PP implies not only contextuality but also LC, since it provides a purely possibilistic contradiction with NC. In addition, any inequality-free proof is associated to at least one PP.

Example 9 (Hardy PP)**.** Hardy's inequality-free proof [25,26] is based on the occurrence of the following PP:

$$\begin{cases} p_{11}(1,1) > 0 \\ p_{12}(1,0) = 0 \\ p_{21}(0,1) = 0 \\ p_{22}(1,1) = 0 \end{cases} \quad , \tag{2.11}$$

where $p_{\mu\nu}$ denotes the joint probability for the context $\{A_\mu, B_\nu\}$ in the Bell scenario $(2,2,2)$, with Alice's and Bob's measurement $\{A_1, A_2\}$ and $\{B_1, B_2\}$, respectively. To demonstrate that

[1] The explicit calculations may be found at Ref. [17].

these conditions actually define a PP, just notice that the second, forth, and third conditions read respectively as: $A_1 = 1 \implies B_2 = 1$, $B_2 = 1 \implies A_2 = 0$, and $A_2 = 0 \implies B_1 = 0$. Hence, for any global assignment compatible with these constrains we have $A_1 = 1 \implies B_1 = 0$, meaning that $p_{11}(1,1) = 0$, which contradicts the first condition. Therefore, the occurrence of (2.11) implies LC.

Example 10 (Cabello *et al.* PP)**.** Cabello *et al.* inequality-free proof [33] is based on the occurrence of the following PP:

$$\begin{cases} p_1(0,1) > 0 \\ p_2(1,1) = 0 \\ p_3(0,0) = 0 \\ p_4(1,1) = 0 \\ p_5(0,0) = 0 \end{cases}, \tag{2.12}$$

where p_μ denotes the joint probability for the context $\{M_\mu, M_{\mu+1}\}$ in the KCBS scenario. To demonstrate that (2.12) is actually a PP, just notice that the second, third, forth, and fifth conditions read respectively as: $M_2 = 1 \implies M_3 = 0$, $M_3 = 0 \implies M_4 = 1$, $M_4 = 1 \implies M_5 = 0$, and $M_5 = 0 \implies M_1 = 1$. Hence, for any global assignment compatible with these constrains we have $M_2 = 1 \implies M_1 = 1$, meaning that $p_1(0,1) = 0$, which contradicts the first condition. Therefore, the occurrence of (2.12) implies LC.

Necessary and Sufficient Conditions for LC

Herein we aim at understanding, as general as possible, the connection between PP and LC. The building blocks of our discussion will be the n-cycle scenarios. As already mentioned, an n-cycle scenario consists of n dichotomic measurements, $\{M_1, \ldots, M_n\}$, $O = \{0,1\}$, whose contexts are $C_i := \{M_i, M_{i+1}\}$, where the sums in indexes are taken modulo n. The following theorem states necessary and sufficient conditions for LC in such scenarios.

Remark. In what follows, whenever we refer to the n-cycle scenarios, the sums in the indexes will be taken modulo n, where $n+1 = 1$. A joint probability distribution for the context C_i will be denoted by p_i.

Theorem 10. *A behavior for the n-cycle scenario is LC if, and only if, there exist* $(a,b) \in O^2$ *and* $(\alpha_1, \ldots, \alpha_{n-2}) \in O^{n-2}$ *such that*

$$\begin{cases} p_i(a,b) > 0 \\ p_{i+1}(b,\alpha_1) = 0 \\ p_{i+2}(\neg\alpha_1, \alpha_2) = 0 \\ \vdots \\ p_{i+n-1}(\neg\alpha_{n-2}, a) = 0 \end{cases}, \tag{2.13}$$

for some $1 \leq i \leq n$.

Proof. First of all, let us demonstrate that the conditions (2.13) defines a PP. The second, third, ... conditions can be respectively read as: $M_{i+1} = b \implies M_{i+2} = \neg\alpha_1$, $M_{i+2} = \neg\alpha_1 \implies M_{i+3} = \neg\alpha_2$, $M_{i+3} = \neg\alpha_2 \implies M_{i+4} = \neg\alpha_3$, ..., $M_{i+n-1} = \neg\alpha_{n-2} \implies M_i = \neg a$. Therefore, for any global assignment compatible with these constrains we have $M_{i+1} = b \implies M_i = \neg a$, meaning that $p_i(a,b) = 0$, which contradicts the first condition. Therefore, the occurrence of (2.13) implies LC.

To prove the converse, consider the contrapositive of the statement, *i.e.* let us prove that non-occurrence of PP (2.13) implies logical noncontextuality. Non-occurrence of (2.13) means that

$$\bar{p}_{i+1}(b,\alpha_1) \vee \left(\bigvee_{j=2}^{n-2} \bar{p}_{i+j}(\neg\alpha_{j-1},\alpha_j) \right) \vee \bar{p}_{i+n-1}(\neg\alpha_{n-2},a) = 1, \tag{2.14}$$

for all $(\alpha_1,\ldots,\alpha_{n-2}) \in O^{n-2}$ whenever $\bar{p}_i(a,b) = 1$. For simplicity (but without loss of generality), consider $i = 1$. Since $\bar{p}_1(a,b) = 1$, ND [Eq. (2.4)] implies that

$$\begin{cases} \bar{p}_2(b,\alpha_1) \vee \bar{p}_2(b,\neg\alpha_1) = 1 \\ \bar{p}_n(\alpha_{n-2},a) \vee \bar{p}_n(\neg\alpha_{n-2},a) = 1 \end{cases}, \tag{2.15}$$

for all $\alpha_1,\alpha_{n-2} \in O$. From normalization condition to $\bar{p}_3$ and ND, it is always possible to find $(\beta_1,\ldots,\beta_{n-2}) \in O^{n-2}$ such that

$$\bar{p}_3(\beta_1,\beta_2) = \bar{p}_4(\beta_2,\beta_3) = \cdots = \bar{p}_{n-1}(\beta_{n-3},\beta_{n-2}) = 1. \tag{2.16}$$

Since $\bar{p}_3(\beta_1,\beta_2) = \bar{p}_{n-1}(\beta_{n-3},\beta_{n-2}) = 1$, from ND follows that

$$\begin{cases} \bar{p}_2(b,\beta_1) \vee \bar{p}_2(b,\neg\beta_1) = 1 \\ \bar{p}_2(b,\beta_1) \vee \bar{p}_2(\neg b,\beta_1) = 1 \end{cases}, \tag{2.17a}$$

$$\begin{cases} \bar{p}_n(\beta_{n-2},a) \vee \bar{p}_n(\neg\beta_{n-2},a) = 1 \\ \bar{p}_n(\beta_{n-2},a) \vee \bar{p}_n(\beta_{n-2},\neg a) = 1 \end{cases}. \tag{2.17b}$$

In Eq. (2.17) we have a set of Boolean equations that need to be simultaneously satisfied. A trivial solution of Eqs. (2.17) is

$$\bar{p}_2(b,\beta_1) = \bar{p}_n(\beta_{n-2},a) = 1. \tag{2.18}$$

From Eqs. (2.16), (2.18), and the fact that $\bar{p}_1(a,b) = 1$, it follows that, in this considered case, $(a,b,\beta_1,\ldots,\beta_{n-2})$ is a global assignment. Hence, from theorem 9, the associated behavior is logically NC. Suppose that the most non-trivial case occurs (the other possible cases may be proved in a similar way to what we will consider), that is

$$\begin{aligned} \bar{p}_2(b,\neg\beta_1) &= \bar{p}_2(\neg b,\beta_1) \\ &= \bar{p}_n(\neg\beta_{n-2},a) = \bar{p}_n(\beta_{n-2},\neg a) = 1, \end{aligned} \tag{2.19}$$

and

$$\bar{p}_2(b,\beta_1) = \bar{p}_n(\beta_{n-2},a) = 0. \tag{2.20}$$

Taking $\alpha_1 = \beta_1$ and $\alpha_{n-2} = \neg\beta_{n-2}$ in Eq. (2.14), the non-occurrence of (2.13) reads

$$\bar{p}_3(\neg\beta_1, \alpha_2) \vee \left(\bigvee_{j=4}^{n-2} \bar{p}_j(\neg\alpha_{j-2}, \alpha_{j-1}) \right) \\ \vee \bar{p}_{n-1}(\neg\alpha_{n-3}, \neg\beta_{n-2}) = 1. \tag{2.21}$$

Since from Eq. (2.19), $\bar{p}_2(b, \neg\beta_1) = 1$, the ND condition implies that

$$\bar{p}_3(\neg\beta_1, \beta_2') = \cdots = \bar{p}_{n-1}(\beta_{n-3}', \beta_{n-2}') = 1, \tag{2.22}$$

for some $(\beta_2', \ldots, \beta_{n-2}') \in O^{n-4}$. If $\beta_{n-2}' = \neg\beta_{n-2}$, then $(a, b, \neg\beta_1, \beta_2', \ldots, \beta_{n-3}', \neg\beta_{n-2})$ is a global assignment, and then, from theorem 9, the associated behaviour is logically NC. Consider the other possible case, *i.e.*

$$\bar{p}_{n-1}(\beta_{n-3}', \neg\beta_{n-2}) = 0. \tag{2.23}$$

Since $\bar{p}_n(\neg\beta_{n-2}, a) = 1$, from (2.4) and (2.15), we must have that

$$\bar{p}_{n-1}(\neg\beta_{n-3}', \neg\beta_{n-2}) = 1. \tag{2.24}$$

If $\beta_{n-3}' = \neg\beta_{n-3}$, the above equation, the fact that $\bar{p}_1(a, b) = 1$, and Eq. (2.22) imply that $(a, b, \neg\beta_1, \ldots, \beta_{n-3}, \neg\beta_{n-2})$ is a global assignment. Suppose $\beta_3' = \beta_3$. Thus, the application of ND condition (2.4) to (2.24) yields

$$\bar{p}_{n-2}(\beta_{n-4}, \neg\beta_{n-3}) \vee \bar{p}_{n-2}(\neg\beta_{n-4}, \neg\beta_{n-3}) = 1. \tag{2.25}$$

If $\bar{p}_{n-2}(\beta_{n-4}, \neg\beta_{n-3}) = 1$, then $(a, b, \neg\beta_1, \beta_2, \ldots, \beta_{n-4}, \neg\beta_{n-3}, \neg\beta_{n-2})$ is a global assignment, and, from theorem 9, we have logical NC. Consider again the case where it does not occur, *i.e.*

$$\bar{p}_{n-2}(\beta_{n-4}, \neg\beta_{n-3}) = 0. \tag{2.26}$$

If we keep repeating this process, always choosing solutions that do not allow the construction of a global assignment, we will have

$$\begin{aligned} \bar{p}_{n-1}(\beta_{n-3}, \neg\beta_{n-2}) &= \bar{p}_{n-2}(\beta_{n-4}, \neg\beta_{n-3}) \\ &= \cdots = \bar{p}_3(\beta_1, \neg\beta_2) = 0. \end{aligned} \tag{2.27}$$

However, the application of De-Morgan's law to the above equation direct shows that it contradicts Eq. (2.21), and then the initial hypothesis of non-occurrence of (2.13). Therefore, the non-occurrence of the conditions (2.13) in the n-cycle scenario implies logical NC. ■

An immediate consequence of theorem 10 is that in the bipartite Bell scenario $(2, 2, 2)$, the occurrence of generalizations of the Hardy's PP (2.11) is necessary and sufficient for logical nonlocality.

Remark. In what follows, whenever we refer to a bipartite Bell scenario $(2, k, 2)$, we will consider that one part (Alice) has the measurements $\{A_1, \ldots, A_k\}$, while the other (Bob) has $\{B_1, \ldots, B_k\}$. We will denote by $p_{\mu\nu}$ the joint probability distribution for the context $\{A_\mu, B_\nu\}$.

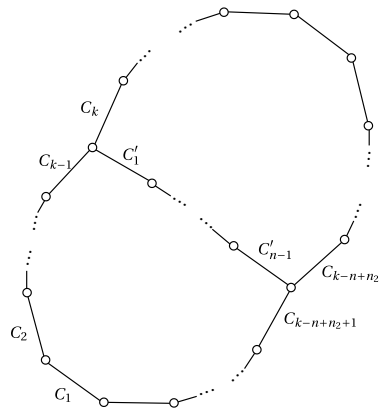

Figure 2.3: Compatibility graph of two coupled cycles with n_1 and n_2 vertices sharing n of those.

Corollary. *For the Bell scenario* $(2,2,2)$*, a behavior is LC if, and only if, there exists a joint outcome* $(a,b) \in O^2$ *and* $(\alpha_1,\alpha_2) \in O^2$ *such that*

$$\begin{cases} p_{ij}(a,b) > 0 \\ p_{kj}(\alpha_1,b) = 0 \\ p_{i\ell}(a,\alpha_2) = 0 \\ p_{k\ell}(\neg\alpha_1,\neg\alpha_2) = 0 \end{cases}, \tag{2.28}$$

where $i \neq k$ *and* $j \neq \ell$*.*

Proof. Just notice that the Bell scenario $(2,2,2)$ is the 4-cycle scenario if one defines $M_1 = A_1$, $M_2 = B_1$, $M_3 = A_2$, and $M_4 = B_2$. Hence, theorem 10 can be immediately applied. ■

A less trivial consequence of theorem 10 is that the PP (2.13) has a "universality" on simple scenarios. At this point, it is important to recall the Vorob'yev theorem [48,49], which states that acyclic scenarios are contextuality-free [46]. The following theorem states that, in non-acyclic simple scenarios, we just need to look for their cycles induced subgraphs in order to detect LC.

Theorem 11. *In a simple scenario which is not free of cycles, the occurrence of the PP (2.13) in one of its cycles is necessary and sufficient for LC.*

Proof. From the same argument presented in the proof of theorem 10, the occurrence of (2.13) implies LC. To prove the converse, consider the contrapositive of the statement, *i.e.* let us assume that no such PPs occur and then show that it implies logical NC.

First of all, consider the simplest situation, where the scenario has only one cycle. In this considered case, the non-occurrence of (2.13) implies that it is always possible to find $(a_1,\ldots,a_n) \in O^n$ such that $\bar{p}_1(a_1,a_2) = \cdots = \bar{p}_n(a_n,a_1) = 1$, where $\bar{p}_k$ denotes the joint possibility distribution for the context $\{M_k, M_{k+1}\}$ in the cycle. We can always extend any of these assignments to the other measurements in the scenario by using the ND condition [Eq. (2.4)]. Therefore, the non-occurrence of (2.13) in the cycle implies logical NC. The same can be concluded for a scenario with an arbitrary number of disjoint cycles.

Finally, consider the case where there are coupled cycles. For simplicity consider two cycles with n_1 and n_2 vertices sharing n of those. In this scenario it is easy to see that

there are three possible cycles: two cycles with n_1 and n_2 vertices and an external cycle with $N := n_1 + n_2 + 2(1-n)$ vertices (see Fig. 2.1). From Theorem 10, the absence of PP (2.13) in the external cycle implies that it is possible to give an assignment $(a_1, \ldots, a_N)$ such that $\bar{p}_1(a_1, a_2) = \bar{p}_2(a_2, a_3) = \cdots = \bar{p}_N(a_N, a_1) = 1$, where $\bar{p}_i$ denotes the joint possibility distribution for the context $\{M_i, M_{i+1}\}$ in the external cycle. Applying the non-disturbance condition, we can extend this assignment in the following way: $\bar{p}'_1(a_k, \alpha_2) = \bar{p}'_2(\alpha_2, \alpha_3) = \cdots = \bar{p}'_{n-2}(\alpha_{n-2}, \alpha_{n-1}) = \bar{p}'_{n-1}(\alpha_{n-1}, \alpha_n) = 1$, where $\bar{p}'_i$ denotes the joint probability distributions for the context C'_i (see Fig. 2.1). If $\alpha_n = a_{k+n_2-n+1}$, then $(a_1, \ldots, a_N, \alpha_2, \ldots, \alpha_{n-1})$ is a global assignment, and the theorem is proved. Let us assume that the non-trivial case occurs, that is $p'_{n-1}(\alpha_{n-1}, a_{k+n_2-n+1}) = 0$. Since $\bar{p}_{k+n_2-n+1}(a_{k+n_2-n}, a_{k+n_2-n+1}) = 1$, from ND condition, $\bar{p}'_{n-1}(\neg\alpha_{n-1}, a_{k+n_2-n+1}) = 1$. Applying ND condition to $\bar{p}'_{n-1}(\neg\alpha_{n-1}, a_{k+n_2-n+1}) = 1$ we have

$$\bar{p}'_{n-2}(\alpha_{n-2}, \neg\alpha_{n-1}) \vee \bar{p}'_{n-2}(\neg\alpha_{n-2}, \neg\alpha_{n-1}) = 1. \tag{2.29}$$

If $\bar{p}'_{n-2}(\alpha_{n-2}, \neg\alpha_{n-1}) = 1$, $(a_1, \ldots, a_n, \alpha_2, \ldots, \alpha_{n-2}, \neg\alpha_{n-1})$ is a global assignment, and then the theorem is proved. Consider again the non-trivial case: $\bar{p}'_{n-2}(\alpha_{n-2}.\neg\alpha_{n-1}) = 0$. Until here we have

$$\bar{p}'_{n-1}(\alpha_{n-1}, a_{k+n_2-n+1}) = \bar{p}'_{n-2}(\alpha_{n-2}, \neg\alpha_1) = 0. \tag{2.30}$$

Hence, it is easy to see that if we continue this process, always taking the solution in which the theorem is not proved, at the end of the day we will construct a condition (2.13) in at least one of the cycles. Therefore, the absence of a PP (2.13) in *all* cycles implies logical NC.

This result can be extended to any simple scenario with an arbitrary number of cycles (coupled or not). For that, it is enough that we apply the same arguments above for each pair of coupled cycles of the scenario. ■

Corollary. *For the bipartite Bell scenario* $(2, k, 2)$*, a behavior is LC if, and only if, the following conditions,*

$$\begin{cases} p_{ij}(a, b) > 0 \\ p_{mj}(\alpha_1, b) = 0 \\ p_{i\ell}(a, \alpha_2) = 0 \\ p_{m\ell}(\neg\alpha_1, \neg\alpha_2) = 0 \end{cases}, \tag{2.31}$$

hold, where $i \neq m$ *and* $j \neq \ell$*.*

Proof. The Bell scenario $(2, k, 2)$ consists of $[k(k-1)/2]^2$ coupled cycles with four vertices (see Fig. 2.4). Notice that for any pair of coupled 4-cycles, the external cycle is also a 4-cycle (see proof of theorem 11 and Fig. 2.4). Each choice of indexes in (2.31) defines a possible PP (2.13) in one of the possible 4-cycle subgraphs. Therefore the assumption follows as a directly consequence of theorem 11 and corollary 2.2. ■

An useful way to draw the compatibility graph of bipartite Bell scenarios emphasizing their cycles is to represent the measurements by vertices on two different diagonal lines. Since this graph is bipartite, we connect two vertices if, and only if, they belong to different lines (see Fig. 2.4). From that construction, it is very clear that a Bell-type scenario $(2, k, 2)$ has cycles of up to $2k$ vertices as induced subgraphs. In each of these cycles, it is possible to construct a

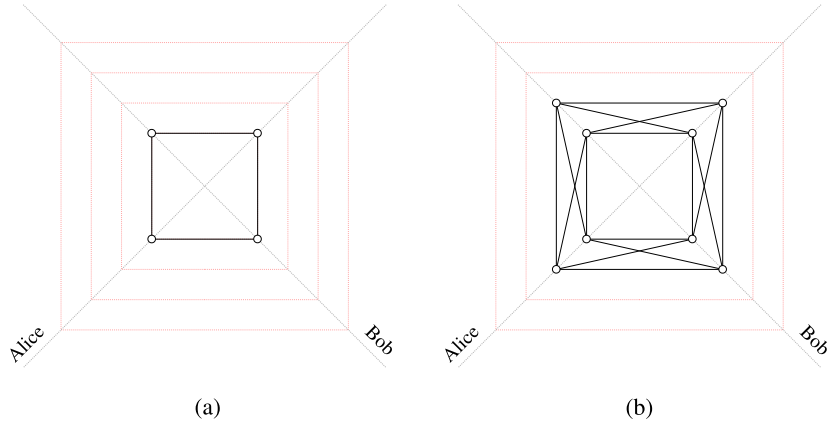

Figure 2.4: Compatibility graph of bipartite Bell scenarios. (a) $(2,2,\ell)$; (b) $(2,4,\ell)$.

PP (2.13). There is an inequality-free proof for quantum nonlocality based on this construction, called *Hardy ladder proof*, since the Boschi *et al.* contribution [34]. It should be stressed that the occurrence of these PP implies the occurrence of (2.31). This fact is a consequence of the completeness given by Corolary 2.2, or can be proved directly (*cf.* Ref. [40]).

Possibilistic Paradoxes With Several Outcomes

So far we have demonstrated that the occurrence of a specific kind of PPs is a necessary and sufficient condition for LC. Such a result applies for every simple scenario with dichotomic measurements. Our goal in this master thesis is to state results as general as possible. So, a natural question is whether it is possible to extend these results for scenarios where the measurements are not dichotomic. As argued by Mansfield and Fritz [40] to the Bell scenarios $(2,k,\ell)$ the answer is no. However, we can shed some light on this issue, at least in a restricted class of scenarios. Such scenarios are the "generalized" n-cycle ones, where we have measurements with more than two possible outcomes.

Theorem 12. *In a generalized n-cycle scenario, where each measurement has ℓ possible outcomes, a behavior is LC if, and only if there exists $(a,b) \in O^2$ such that*

$$\bar{p}_\mu(a,b) = 1, \tag{2.32}$$

together with $(\alpha_i^1,\ldots,\alpha_i^\ell) \in O^\ell$ such that

$$\begin{aligned}\bigvee_{i=1}^{m_1} \bar{p}_{\mu+1}(b,\alpha_1^i) \vee \bigvee_{i=m_1+1}^{\ell} \bigvee_{j=1}^{m_2} \bar{p}_{\mu+2}(\alpha_1^i,\alpha_2^j) \\ \vee\cdots\vee \bigvee_{i=m_\nu+1}^{\ell} \bigvee_{j=1}^{m_{\nu+1}} \bar{p}_{\mu+\nu-1}(\alpha_\nu^i,\alpha_{\nu+1}^j) \\ \vee\cdots\vee \bigvee_{i=m_{n-2}+1}^{\ell} \bar{p}_{\mu+n-1}(\alpha_{n-2}^i,a) = 0,\end{aligned} \tag{2.33}$$

$\alpha_i^x \neq \alpha_i^y$ if $x \neq y$, $m_i \leq \ell$, $i \leq n-2$.

Proof. From arguments similar to those presented so far, it is straightforward to verify that the simultaneous occurrence of conditions in Eqs. (2.32) and (2.33) implies LC. More precisely, for any global assignment compatible with the condition of Eq. (2.33) we must have that $\bar{p}_\mu(a,b) = 0$, which contradicts (2.32). Now suppose that a given behavior is LC. From theorem 10 it implies that some PP (2.13) must occur with some pair of outcomes, say $\{a,b\} \subseteq O$ where $\neg a := b$ and $\neg b := a$. Otherwise it would be possible to build a global assignment of the form $(x_1,\ldots,x_n) \in \{a,b\}^n$. However, PP (2.13) is equivalent to the conditions of Eq. (2.32) together with Eq. (2.33) taking $m_1 = \cdots = m_{n-2} = 1$. ∎

If we restrict our attention to the bipartite Bell scenarios, we recover Mansfield and Fritz's results [40]. In that paper, the authors demonstrated that the non-occurrence of a "coarse-grained Hardy paradox" is equivalent to LC in the Bell scenarios $(2,2,\ell)$. This is exactly the same content of the theorem 12 if one takes $n = 4$.

Theorem 12 states that the occurrence of a PP defined by (2.32) together with (2.33) is necessary and sufficient to LC in the generalized n-cycle scenarios. However, a much simpler way of constructing an inequality-free proof for contextuality, which is particularly interesting when dealing with quantum implementations, was proposed by Chen *et al.* [30].

Example 11 (Chen *et al.* PP)**.** Chen *et al.* inequality-free proof [30] is constructed in a generalized 4-cycle scenario with ℓ possible outcomes, $O = \{0,1,\ldots,\ell-1\}$, and it is based on the following PP:

$$\begin{cases} p_i(a_i < a_{i+1}) > 0 \\ p_{i+1}(a_{i+1} > a_{i+2}) = 0 \\ p_{i+2}(a_{i+2} > a_{i+3}) = 0 \\ p_{i+3}(a_{i+3} > a_i) = 0 \end{cases}, \tag{2.34}$$

where

$$p_\mu(a_\mu < a_{\mu+1}) := \sum_{x<y} p_\mu(x,y), \tag{2.35a}$$

$$p_\mu(a_\mu > a_{\mu+1}) := \sum_{x>y} p_\mu(x,y). \tag{2.35b}$$

In order to demonstrate that Eq. (2.34) actually defines a PP, consider, without loss of generality, $i = 1$. Notice that if such conditions occurs, the last $n-1$ conditions imply that for any global assignment (a_1,a_2,a_3,a_4) we must have that $a_2 \leq a_3 \leq a_4 \leq a_1$. Therefore, we are enforced to conclude that $p_1(a_1 < a_2) = 0$, which contradicts the first condition. Therefore, the occurrence of the conditions of Eq. (2.34) implies LC.

2.3. Quantum Possibilistic Paradoxes

In this section we review some inequality-free proofs for contextuality and nonlocality, focusing on those realized in simple scenarios. The presentation of such results is not intended to be identical to the originals, but rather to present them emphasizing the concepts developed in the previous sections of this chapter.

Hardy Nonlocality Paradox

The first example we will consider is the original Hardy's inequality-free proof for quantum nonlocality [25, 26]. Consider a bipartite Bell scenario $(2,2,2)$, in which the parts, Alice and Bob, receive pairs of particles created at a common source (such as illustrated in Figure 1.3 (a)). Let $\{A_1, A_2\}$ and $\{B_1, B_2\}$ denote the measurements of Alice and Bob respectively, and let $p_{\mu\nu}$ denote the joint probability distribution for the context $\{A_\mu, B_\nu\}$.

As already mentioned [Example 9], Hardy's inequality-free proof is based on the occurrence of the following PP

$$\begin{cases} p_{11}(1,1) > 0 \\ p_{21}(0,1) = 0 \\ p_{12}(1,0) = 0 \\ p_{22}(1,1) = 0 \end{cases} \tag{2.36}$$

Once the occurrence of these conditions implies nonlocality, one may ask if it is possible to realize them within quantum theory. As demonstrated by Hardy [26], it is possible to realize such conditions with an 2-qubit system. For that, consider a pure state $|\eta\rangle \in \mathbb{C}^2 \otimes \mathbb{C}^2$, whose Schmidt decomposition is

$$|\eta\rangle = \cos\alpha |e_1\rangle \otimes |f_1\rangle + \sin\alpha |e_2\rangle \otimes |f_2\rangle, \tag{2.37}$$

where $\{|e_1\rangle, |e_2\rangle\}$ and $\{|f_1\rangle, |f_2\rangle\}$ are orthonormal basis of $\mathbb{C}^2$, and $\alpha \in [0, \pi/4]$. Consider that both Alice and Bob perform local projective measurements, in such a way that

$$A_k = |a_k\rangle\langle a_k| \otimes \mathbb{I}_2 \quad \text{and} \quad B_k = \mathbb{I}_2 \otimes |b_k\rangle\langle b_k|, \tag{2.38}$$

for some vectors $|a_k\rangle$ and $|b_k\rangle$ of $\mathbb{C}^2$, $k \in \{1,2\}$. It is a straightforward (but somewhat laborious) calculation to demonstrate that the last three conditions of (2.36) imply that the vectors $|a_k\rangle$ and $|b_k\rangle$ must be the following

$$|a_1\rangle = \frac{(\sin\alpha)^{\frac{3}{2}}|e_1\rangle + \mathrm{i}(\cos\alpha)^{\frac{3}{2}}|e_2\rangle}{\sqrt{(\sin\alpha)^3 + (\cos\alpha)^3}}, \tag{2.39a}$$

$$|a_2\rangle = \frac{(\sin\alpha)^{\frac{1}{2}}|e_1\rangle + \mathrm{i}(\cos\alpha)^{\frac{1}{2}}|e_2\rangle}{\sqrt{\sin\alpha + \cos\alpha}}, \tag{2.39b}$$

$$|b_1\rangle = \frac{(\sin\alpha)^{\frac{3}{2}}|f_1\rangle + \mathrm{i}(\cos\alpha)^{\frac{3}{2}}|f_2\rangle}{\sqrt{(\sin\alpha)^3 + (\cos\alpha)^3}}, \tag{2.39c}$$

$$|b_2\rangle = \frac{(\sin\alpha)^{\frac{1}{2}}|f_1\rangle + \mathrm{i}(\cos\alpha)^{\frac{1}{2}}|f_2\rangle}{\sqrt{\sin\alpha + \cos\alpha}}. \tag{2.39d}$$

Therefore, we conclude that $p_{21}(0,1) = p_{12}(1,0) = p_{22}(1,1) = 0$ and, from Eqs. (2.37–2.39),

$$p_{11}(1,1) = \left(\frac{\cos\alpha(\sin\alpha)^3 - \sin\alpha(\cos\alpha)^3}{(\cos\alpha)^3 + (\sin\alpha)^3}\right)^2, \tag{2.40}$$

which is strictly larger than zero if $\alpha \notin \{0, \pi/4\}$.

The discussion above demonstrates that the PP (2.36) can be realized by 2-qubit systems for almost all entangled pure state, with the exception of the maximally entangled states. This demonstration of quantum nonlocality is known as *Hardy nonlocality paradox*. For mixed states, in turn, Hardy's argument does not hold [97]. In fact, notice that from the last three conditions of (2.36), the state vector $|\eta\rangle$ must be orthogonal to $|a_1\rangle \otimes |\tilde{b}_2\rangle$, $|\tilde{a}_2\rangle \otimes |b_1\rangle$, and $|a_2\rangle \otimes |b_2\rangle$, where $\langle a_i|\tilde{a}_i\rangle = \langle b_i|\tilde{b}_i\rangle = 0$. Since these three vectors are linearly independent, once they are given, the state vector $|\eta\rangle$ is unique. Therefore, no mixed state is able to produce a Hardy nonlocality paradox (at least in a 2-qubit system).

It is possible to construct the Hardy nonlocality paradox starting from measurements instead of a state [98]. For that, consider two pairs of local projective measurements $A_i = |a_i\rangle\langle a_i| \otimes \mathbb{I}_2$ and $B_i = \mathbb{I}_2 \otimes |b_i\rangle\langle b_i|$, $i \in \{1,2\}$. From the last three conditions of (2.36), the state vector $|\eta\rangle$ must be orthogonal to $|a_1\rangle \otimes |\tilde{b}_2\rangle$, $|\tilde{a}_2\rangle \otimes |b_1\rangle$, and $|a_2\rangle \otimes |b_2\rangle$, where $\langle a_i|\tilde{a}_i\rangle = \langle b_i|\tilde{b}_i\rangle = 0$. Hence, in the basis $\{|a_2\rangle \otimes |b_2\rangle, |\tilde{a}_2\rangle \otimes |b_2\rangle, |a_2\rangle \otimes |\tilde{b}_2\rangle, |\tilde{a}_2\rangle \otimes |\tilde{b}_2\rangle\}$ of $\mathbb{C}^2 \otimes \mathbb{C}^2$, $|\eta\rangle$ is written (up to normalization) as

$$|\eta\rangle = \alpha|\tilde{a}_2\rangle \otimes |b_2\rangle + \beta|a_2\rangle \otimes |\tilde{b}_2\rangle + \gamma|\tilde{a}_2\rangle \otimes |\tilde{b}_2\rangle, \tag{2.41}$$

where $\alpha = \langle b_2|\tilde{b_1}\rangle$, $\beta = \langle a_2|\tilde{a_1}\rangle$, and $\gamma = \langle a_1|a_2\rangle = \langle b_1|b_2\rangle$. The last condition, $\langle a_1|a_2\rangle = \langle b_1|b_2\rangle$, means that Alice's measurements may differ from Bob's ones only by a unitary. In addition, from (2.41) it follows that

$$p_{11}(1,1) = |(\langle a_1| \otimes \langle b_1|)|\eta\rangle|^2 = |\langle a_2|\tilde{a_1}\rangle\langle b_1|\tilde{b_2}\rangle\langle a_1|a_2\rangle|^2, \tag{2.42}$$

which is different from zero for a suitable choice of vectors. In particular, we need to require that $[A_1, A_2] \neq 0$ and $[B_1, B_2] \neq 0$, otherwise at least one of the inner products on the right-hand side of Eq. (2.42) will be equal to zero. It is very easy to verify that if one impose $p_{11}(1,1) > 0$ in Eq. (2.42), then the associate state vector $|\eta\rangle$ will be neither a product nor a maximally entangled state. In fact, if $\langle a_2|\tilde{a_1}\rangle\langle b_1|\tilde{b_2}\rangle = 0$ then $|\eta\rangle \in \{|\tilde{a}_1\rangle \otimes |\tilde{b}_2\rangle, |\tilde{a}_2\rangle \otimes |\tilde{b}_1\rangle\}$, that is $|\eta\rangle$ is a product state; if $\langle a_1|a_2\rangle = 0$ then $|\eta\rangle = |\tilde{a}_2\rangle \otimes |b_2\rangle + |\tilde{a}_1\rangle \otimes |\tilde{b}_2\rangle$, which is a maximally entangled state, since $\langle \tilde{a}_2|\tilde{a}_1\rangle = 0$ whenever $\langle a_1|a_2\rangle = 0$. In summary, we conclude that if Alice and Bob each have a pair of incompatible measurements, with Alice's measurements differing from the Bob's ones by a unitary, then it is possible to define a state (which will be entangled but not maximally entangled) in such a way that the conditions (2.36) are satisfied.

The contradiction between (2.36) and locality arise due to the fact that the probability $p_{11}(1,1)$ is strictly larger than zero[2]. So, it may be interesting to know what is the largest value that such a probability can assume in different situations. For a 2-qubit system, for instance, we have

$$p_{11}(1,1) \leq \max_{\alpha\in[0,\pi/4]} \left(\frac{\cos\alpha(\sin\alpha)^3 - \sin\alpha(\cos\alpha)^3}{(\cos\alpha)^3 + (\sin\alpha)^3} \right)^2 = \frac{5\sqrt{5}-11}{2} \approx 9\%. \tag{2.43}$$

It means that, although Hardy's nonlocality be qualitatively strong, its discrepancy with classical predictions is quantitatively small. There are two possible strategies to work around this problem in bipartite Bell scenarios: to consider more measurements per part or to consider measurements with more than two possible outcomes. These two possibilities will be discussed in the following sections.

[2]This probability is sometimes called "Hardy probability".

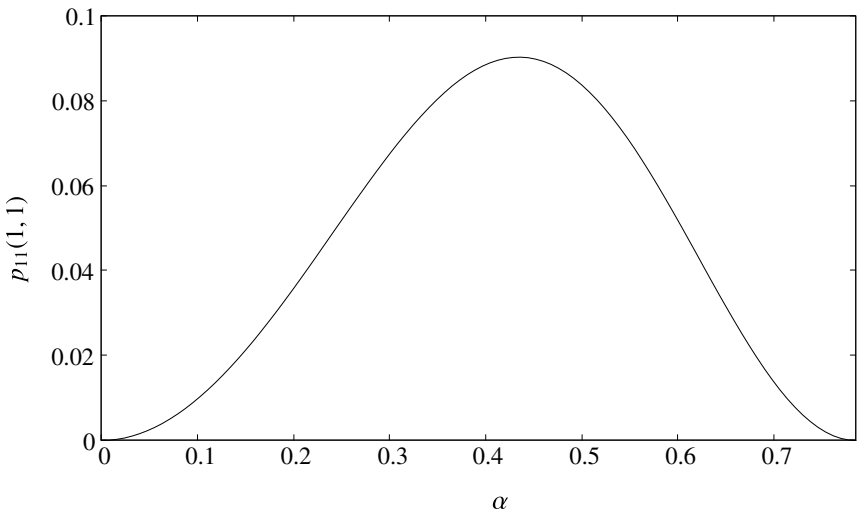

Figure 2.5: Non-zero probability of Hardy nonlocality paradox [Eq. 2.40].

The property used to construct the Hardy nonlocality paradox was basically orthogonality. So, one may think in use a high-dimensional Hilbert space maintaining the scenario. Of course, a Hilbert space with high dimension allows much more "orthogonality arguments" than a lower dimensional one. Unfortunately, this strategy does not work for this problem. In other words, the maximum value of the probability $p_{11}(1,1)$ in (2.36) is $(5\sqrt{5}-11)/2$ independently of the Hilbert space dimension [99]. That is, this value is a Tsirelson-like bound for Hardy nonlocality paradox.

Hardy Ladder Paradox

In the previous section we have concluded that Hardy nonlocality paradox does not provide quantitatively large violations of classical predictions. A possible strategy to get around this difficulty is to modify the scenario including more measurements for each part. In particular, here we will deal with the quantum implementations of the Hardy ladder paradoxes [34, 100].

Hardy ladder paradox generalizes Hardy nonlocality paradox for bipartite Bell scenarios $(2,k,2)$. This inequality-free proof is based on the occurrence of the following PP:

$$\begin{cases} p_{11}(1,1) > 0 \\ P_{12}(0,1) = 0 \\ p_{23}(0,1) = 0 \\ \vdots \\ p_{k-1,k}(0,1) = 0 \\ p_{k,k}(1,1) = 0 \\ p_{k,k-1}(1,0) = 0 \\ \vdots \\ p_{32}(1,0) = 0 \\ p_{21}(1,0) = 0 \end{cases} . \tag{2.44}$$

The above set of possibilistic conditions is a possibilistic paradox of the form of Eq. (2.13) defined in one of the $2k$-cycle induced subgraphs of $\mathfrak{B}_{n;k}$. Thus, it actually defines a PP.

As in the previous section, consider a 2-qubit system in an arbitrary pure state $|\eta\rangle$, whose Schmidt decomposition reads

$$|\eta\rangle = \cos\alpha|e_1\rangle \otimes |f_1\rangle + \sin\alpha|e_2\rangle \otimes |f_2\rangle, \tag{2.45}$$

where $\{|e_1\rangle, |e_2\rangle\}$ and $\{|f_1\rangle, |f_2\rangle\}$ are orthonormal basis of $\mathbb{C}^2$, and $\alpha \in [0, \pi/4]$. For $1 \leq k \leq n/2$, define

$$|a_{j-k+1}\rangle = \frac{(-1)^j(\cos\alpha)^{j-\frac{1}{2}}|e_1\rangle + \mathrm{i}(\sin\alpha)^{j-\frac{1}{2}}|e_2\rangle}{\sqrt{(\cos\alpha)^{2j-1} + (\sin\alpha)^{2j-1}}}, \tag{2.46a}$$

$$|b_{j-k+1}\rangle = \frac{(-1)^j(\cos\alpha)^{j-\frac{1}{2}}|f_1\rangle + \mathrm{i}(\sin\alpha)^{j-\frac{1}{2}}|f_2\rangle}{\sqrt{(\cos\alpha)^{2j-1} + (\sin\alpha)^{2j-1}}}, \tag{2.46b}$$

and the local projective measurements

$$A_j = |a_j\rangle\langle a_j| \otimes \mathbb{I}_2 \quad \text{and} \quad B_j = \mathbb{I}_2 \otimes |b_j\rangle\langle b_j|, \tag{2.47}$$

where $j \in [k]$. The vectors in Eq. (2.46) was defined in such a way that the conditions (2.44) are satisfied. In addition, from (2.45–2.46),

$$p_{11}(1,1) = \left(\frac{\sin\alpha(\cos\alpha)^{2k-1} - \cos\alpha(\sin\alpha)^{2k-1}}{(\cos\alpha)^{2k-1} + (\sin\alpha)^{2k-1}}\right)^2. \tag{2.48}$$

As in Hardy's nonlocality paradox, the above probability is non-zero whenever $\alpha \notin \{0, \pi/4\}$, which implies that the state vector $|\eta\rangle$ is neither a product nor a maximally entangled state.

Hardy ladder paradox is a generalization of the Hardy nonlocality paradox (which correspond to $k = 2$). In addition, the maximum value of the probability $p_{11}(1,1)$ in Eq. (2.48) grows monotonically and rapidly with k. For $k = 3$, for instance, its value is $\approx 17.5\%$, which is almost twice the corresponding value for $k = 2$. As in the case where $k = 2$, for all $k \in \mathbb{N}$, no mixed states can be used to construct a Hardy ladder paradox.

Chen et al. Paradox

Another possible way to increase quantum violations in inequality-free proofs is to consider measurements with more than two outcomes. Consider the bipartite Bell scenario $(2, 2, \ell)$, where Alice's measurements are $\{A_1, A_2\}$ while Bob's ones are $\{B_1, B_2\}$. As in the previous sections, $p_{\mu\nu}$ denotes the joint probability distribution for the context $\{A_\mu, B_\nu\}$. For that scenario, a possible generalization of the conditions (2.36) are the following:

$$\begin{cases} p_{11}(a_1 < b_1) > 0 \\ p_{21}(a_2 < b_1) = 0 \\ p_{12}(a_1 < b_2) = 0 \\ p_{22}(a_2 > b_2) = 0 \end{cases}, \tag{2.49}$$

where

$$p_{\mu\nu}(a_\mu < b_\nu) = \sum_{x<y} p_{\mu\nu}(x,y), \qquad \text{and} \qquad p_{\mu\nu}(a_\mu > b_\nu) = \sum_{x>y} p_{\mu\nu}(x,y). \tag{2.50}$$

If one assumes locality, the occurrence of the last three conditions of (2.49) implies that $a_1 \leq b_2 \leq a_2 \leq b_1$, and then $a_1 \leq b_1$ or $p_{11}(a_1 < b_1) = 0$. Therefore, the occurrence of (2.49) implies nonlocality, in particular logical nonlocality.

The alternative in (2.49) formulation was proposed by J. Chen *et al.* in 2013 [30]. In addition to propose such conditions, they also have shown possible quantum realizations of it in a very simple way. Consider a 2-qudit system in an arbitrary state $|\eta\rangle \in \mathbb{C}^d \otimes \mathbb{C}^d$,

$$|\eta\rangle = \sum_{i=1}^{d} \sum_{j=1}^{d} h_{ij} |e_i\rangle \otimes |f_j\rangle, \tag{2.51}$$

where $\{|e_1\rangle, \ldots, |e_d\rangle\}$ and $\{|f_1\rangle, \ldots, |f_d\rangle\}$ are orthonormal basis of $\mathbb{C}^d$. The state $|\eta\rangle$ are completely defined by the $d \times d$ complex matrix H whose entries are h_{ij}. In the considered scenario, both Alice and Bob have two measurements available. Consider that Alice's measurements are A_1 and A_2, with projectors $\{\Pi_o^i : o \in [\ell]\}$, $i \in \{1,2\}$, while Bob's ones are B_1 and B_2 with projectors $\{\Phi_o^i : o \in [\ell]\}$, $i \in \{1,2\}$. Thus, the probability of obtaining a joint outcome (m,n) when measuring the system in an state ρ will be

$$p_{\mu\nu}(m,n) = \mathrm{Tr}\left(\Pi_m^\mu \otimes \Phi_n^\nu \, \rho\right). \tag{2.52}$$

Without loss of generality, we can consider $\Pi_i^1 = |e_i\rangle\langle e_i|$ and $\Phi_i^1 = |f_i\rangle\langle f_i|$, where the vectors $|e_i\rangle$ and $|f_i\rangle$ are the same of Eq. (2.51). Hence, with this choice of vectors, the conditions (2.49) implies that $h_{ij} = 0$ for $i > j$, that is H is an upper triangular matrix. Leaving aside some details, it is possible to demonstrate that the maximum possible value for the non-zero probability in Eq. (2.49) increases with the number of possible outputs ℓ. In particular, for $\ell = 2$ we recover the usual Hardy nonlocality paradox. For $\ell = 3$, the maximum value for the nonzero probability in Eq. (2.49) is $\approx 14\%$, for $\ell = 4$ is $\approx 17.6\%$, and so on.

Therefore, we conclude that Chen *et al* strategy really works well to increase the violation in Hardy-like paradoxes. The only problem with this approach is that optimization over all possible projectors is quite computationally costly. Despite this problem, this form of non-locality was verified experimentally in Ref. [38].

Hardy-Like Proofs to Quantum Contextuality

In Ref. [33] the authors proposed a Hardy-like demonstration of quantum contextuality in a scenario without space-like separation, namely the KCBS scenario. The basic idea was to provide a demonstration having all good properties of the Hardy-like proofs for nonlocality, namely to be inequality-free and to be as simple as possible. Here we will consider such demonstrations in the odd-cycle scenarios, following Ref. [41].

Let $n \geq 5$ odd, consider a qutrit system prepared in an arbitrary pure state $|\eta\rangle$, and define $\{|v_1\rangle, \ldots, |v_n\rangle\} \subset \mathbb{C}^3$ such that $|v_3\rangle$ is (almost) arbitrary (we just need to require $\langle v_3|\eta\rangle \neq 0$), and

$$|v_4\rangle = \frac{\mathbb{I} - |v_3\rangle\langle v_3|}{\sqrt{1 - |\langle\eta|v_3\rangle|^2}}|\eta\rangle, \tag{2.53a}$$

$$|v_k\rangle = \mathrm{R}(\theta_k, |v_{k-1}\rangle)|v_{k-2}\rangle, \tag{2.53b}$$

$$|v_{k+1}\rangle = \frac{\mathbb{I} - |v_k\rangle\langle v_k|}{\sqrt{1 - |\langle\eta|v_k\rangle|^2}}|\eta\rangle, \tag{2.53c}$$

$$|v_1\rangle = \frac{\mathbb{I} - |v_n\rangle\langle v_n|}{\sqrt{1 - |\langle\eta|v_n\rangle|^2}}|\eta\rangle, \tag{2.53d}$$

$$|v_2\rangle = \frac{|v_1\rangle \times |v_3\rangle}{||\,|v_1\rangle \times |v_3\rangle\,||}, \tag{2.53e}$$

for $k \geq 5$ odd, $\theta_k \notin \{\ell\pi : \ell \in \mathbb{Z}\}$. $\mathrm{R}(\theta, |x\rangle)$ denotes the rotation matrix by an angle θ around $|x\rangle$, and $\times$ denotes the usual three-dimensional cross product. From that construction, one can verify that $\langle v_k|v_{k+1}\rangle = \langle v_1|v_n\rangle = 0$. Hence, the compatibility relations for the odd-cycle scenario are well-defined if one consider measurements defined by projectors on vectors $|v_i\rangle$, that is $M_i := |v_i\rangle\langle v_i|$. From Eq. (2.53) it follows that

$$\begin{cases} p_1(0,1) \geq 0 \\ p_2(1,1) = 0 \\ p_3(0,0) = 0 \\ \vdots \\ p_{2k}(1,1) = 0 \\ p_{2k+1}(0,0) = 0 \\ \vdots \\ p_n(0,0) = 0 \end{cases}. \tag{2.54}$$

The conditions above define a Hardy paradox whenever $p_1(0,1) \neq 0$. With a suitable choice of angles, it is always possible to satisfy such a condition. On the other hand, it is quite difficult to compute the largest possible value of $p_1(0,1)$ (which we will denote by γ_n). In fact, only for simple cases it is possible to compute it analytically. For instance, for $n = 5$ we have

$$\gamma_5 = \max_{\alpha,\beta\in[0,\pi)} \frac{[\sin(2\alpha)\sin(2\beta)]^2}{[\cos\alpha\sin(2\beta)]^2 + (2\sin\alpha)^2} = \frac{1}{9}. \tag{2.55}$$

For $n = 7$ the calculations are much more laborious, and one may verify that $\gamma_7 = 1/5$. For higher values of n we numerically estimate γ_n using Mathematica ®. We verify that $\gamma_9 \approx 0.257371$, which is greater than $(1 + 16/\sqrt{27})^{-1}$, claimed by Cabello *et al.* [33] to be the value of γ_9.

In Fig. 2.6 we plot the corresponding values of γ_n that maximize Hardy probabilities for the n-cycle scenarios. For n odd we use the above construction, while for n even we use the measurements of Hardy ladder paradoxes with $n = 2k$.

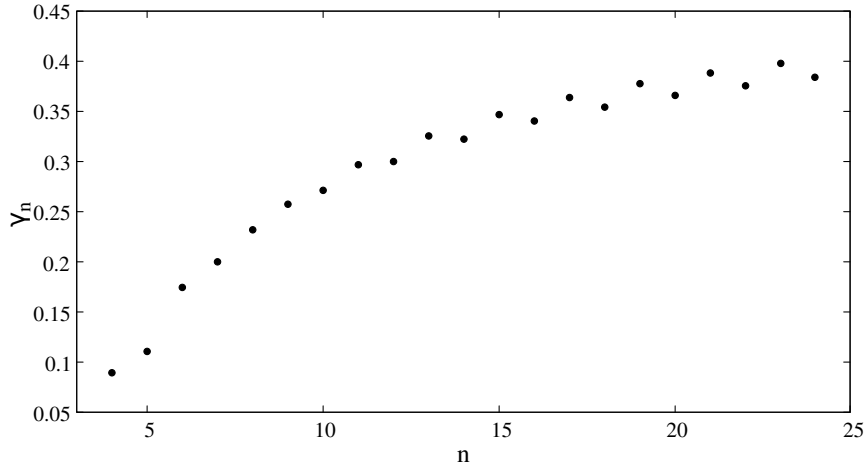

Figure 2.6: Hardy's probabilities for the n-cycle scenarios.

2.4. PR-Boxes and Strong Contextuality

In the year 1994, one of the most important works on quantum nonlocality was published by Popescu and Rohrlich [93]. Bearing in mind that (Bell) locality is not able to capture the entire set of quantum correlations, the authors investigated whether non-signaling could be the physical principle that would retrieve the quantum set. Unfortunately (or not) the answer to that question was negative. More precisely, the authors demonstrated the existence of a set of non-signaling correlations that cannot be reproduced within quantum theory, namely the PR-box [Example 8]. PR-Boxes are then examples of post-quantum behaviours.

PR-Boxes have several implausible consequences. The first we mention is that they maximally violates the CHSH inequality, going then beyond the corresponding Tsirelson bound. A more dramatic feature of PR-box is that it allows, in van Dam words, a "computational free-lunch" [101]. That is, with a PR-Box on hand, all distributed computations can be performed with only one bit. The letter mentioned property is a consequence of the fact that these behaviours violate the information causality principle [15].

Our goal in this section is to understand the relationship between strong contextuality and PR-Box generalizations. In particular we will focus on the n-cycle scenarios. We define a PR-Box in the n-cycle scenario as those behaviour whose bundle diagram are Möbius strips[3] [Fig. 2.2 (c)].

Definition 18. A behaviour for the n-cycle scenario is said to be a PR-Box if

$$\bar{p}_k(a_k, \neg a_{k+1}) = \bar{p}_k(\neg a_k, a_{k+1}) = 1, \tag{2.56a}$$
$$\bar{p}_k(a_k, a_{k+1}) = \bar{p}_k(\neg a_k, \neg a_{k+1}) = 0, \tag{2.56b}$$

and for $i \neq k$,

$$\bar{p}_i(a_i, a_{i+1}) = \bar{p}_i(\neg a_i, \neg a_{i+1}) = 1, \tag{2.57a}$$
$$\bar{p}_i(a_i, \neg a_{i+1}) = \bar{p}_i(\neg a_i, a_{i+1}) = 0, \tag{2.57b}$$

[3]Notice that in the mentioned diagram we made use of the freedom to choose the position of the outcomes above each vertex, obtaining then a Möbius strip. If we choose to leave the diagram with the results fixed as in Fig. 2.1, then we would always have an odd number of intersecting vertices.

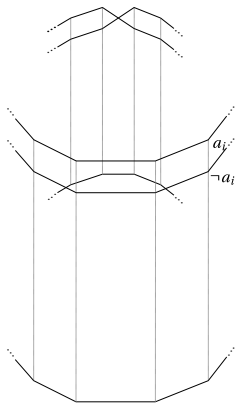

Figure 2.7: Bundle diagram of a generalized PR-Box.

for some $(a_1, \ldots, a_n) \in O^n$.

Theorem 13. *The only SC behaviours for the n-cycle scenarios are generalized PR boxes of Def. 18.*

Proof. Recall that SC means that no global assignment can be defined [Def. 15]. If a behavior for the n-cycle scenario is strongly contextual, then, from theorem 10, every joint outcome with non-zero probability must be associated to a PP (2.13). Hence, for an arbitrary joint outcome (a, b), $\bar{p}_1(a, b) = 1$ implies that

$$\bar{p}_2(b, \alpha_1) = \bar{p}_3(\neg\alpha_1, \alpha_2) = \cdots = \bar{p}_n(\neg\alpha_{n-2}, a) = 0. \tag{2.58}$$

for some $(\alpha_1, \ldots, \alpha_{n-2}) \in O^{n-2}$. Since $\bar{p}_1(a, b) = 1$, the application of ND condition [Eq. (2.4)] in the above equation yields

$$\begin{aligned} \bar{p}_2(b, \neg\alpha_1) &= \bar{p}_3(\neg\alpha_1, \neg\alpha_2) \\ &= \cdots = \bar{p}_{n-1}(\neg\alpha_{n-2}, \neg a) = 1, \end{aligned} \tag{2.59}$$

and

$$\begin{aligned} \bar{p}_2(\neg b, \alpha_1) &= \bar{p}_3(\alpha_1, \alpha_2) \\ &= \cdots = \bar{p}_{n-1}(\alpha_{n-2}, a) = 1. \end{aligned} \tag{2.60}$$

Since we suppose SC, we are enforced to impose that

$$\bar{p}_1(\neg a, b) = \bar{p}_1(a, \neg b) = 0, \tag{2.61}$$

otherwise $(a, \neg b, \alpha_1, \ldots, \alpha_{n-2})$ or $(\neg a, b, \neg\alpha_1, \ldots, \neg\alpha_{n-2})$ would be global assignments. Therefore, from (2.59–2.61) and ND condition, we must have that

$$\bar{p}_1(\neg a, \neg b) = 1. \tag{2.62}$$

Since the joint outcome $(\neg a, \neg b)$ must also be associated to a PP (2.13), from (2.59–2.62), we must have that

$$\begin{aligned} \bar{p}_2(\neg b, \neg\alpha_1) &= \bar{p}_3(\alpha_1, \neg\alpha_2) \\ &= \cdots = \bar{p}_n(\alpha_{n-2}, \neg a) = 0. \end{aligned} \tag{2.63}$$

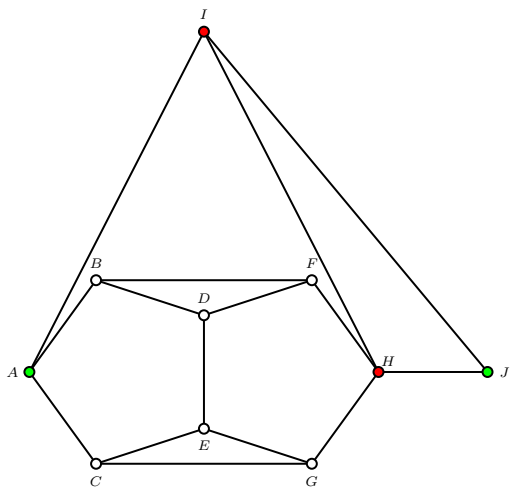

Figure 2.8: "Γ_1 graph" of KS proof [13, Lemma 1]. The TIF structure, the KS bug, mentioned in the main text consists of the set of vertices $\{A, \ldots, H\}$, with corresponding edges.

Defining $a_1 = a$, $a_2 = b$, $a_3 = \neg\alpha_1$, $a_4 = \neg\alpha_2$, and so on, the conditions (2.58–2.63) are exactly the same of (2.56–2.57) with $k = n$. ■

From the above theorem, any SC behaviour for the n-cycle must be of the form provided by conditions (2.56) and (2.57). In addition, it is easy to verify that their occurrence implies maximal violations of the n-cycle noncontextuality inequalities [Eq. (1.13)], and consequently the Tsirelson's bound [Eq. (1.18)]. Therefore, we have demonstrated the following corollary.

Corollary. *There is no strongly contextual quantum behavior for the n-cycle scenarios.*

2.5. Logical Contextuality and KS Proofs

The observation that quantum theory is incompatible with NC assignment of values to observable properties is on the root origins of contextuality. In fact, in contrast to the organization of the present master thesis where we highlight NCI inequalities to witness contextuality, logical inconsistencies between NC assignments and quantum theory were present already in the seminal paper by Kochen-Specker (KS) [13]. In a historical sketch, KS-like proofs of quantum contextuality (KS proofs for short) were dominant until the publication of the aforementioned papers by KCBS [14] and Spekkens [20].

The original KS argument deals with assignments of truth values to measurement results, using a three-dimensional Hilbert space. Each of these assignments is associated to a projector, according to some reasonable rules: (*i*) If two vectors are orthogonal then they are *exclusive*, *i.e.* they cannot be simultaneously true; (*ii*) in any set of three orthogonal vectors, at least one of them is true. The last statement is based of the fact that any set of three mutually orthogonal projectors sum-up to the identity. With this construction on hand, KS demonstrated the existence of a finite set of vectors $\Sigma \subseteq \mathbb{R}^3$ such that there is no function $f : \Sigma \to \{0, 1\}$ such that $f(|a\rangle) + f(|b\rangle) + f(|c\rangle) = 1$, for all $\{|a\rangle, |b\rangle, |c\rangle\} \subset \Sigma$ in which $\langle a|b\rangle = \langle b|c\rangle = \langle c|a\rangle = 0$. It means that it is not possible to assign true/false values, corresponding respectively to 1 and 0, to all projectors in Σ consistently. Here, consistency is read as NC, since the existence of such a

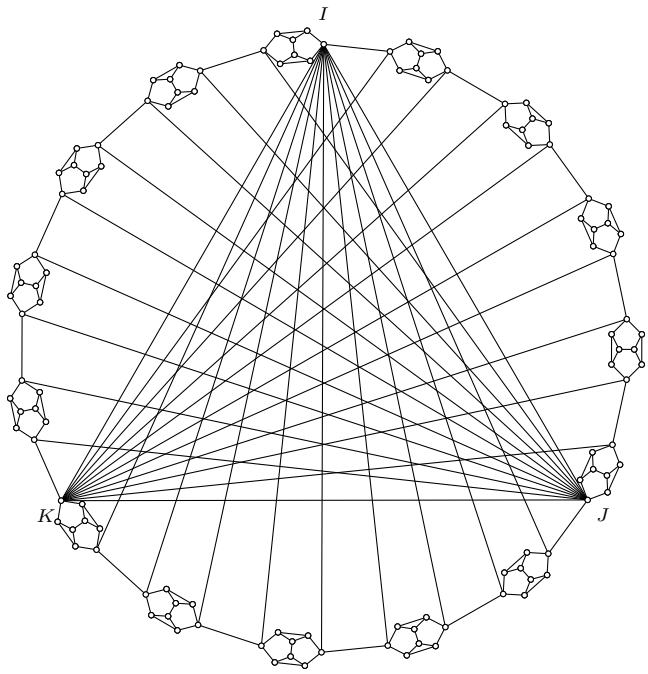

Figure 2.9: "Γ_2 graph" of KS proof [13, Lemma 2].

function would mean an assignment of true/false values for all projectors in Σ obeying the rules that we mention.

The first step in the KS original proof consists of identifying a set of eight vectors whose orthogonality relations are represented by the “KS-bug” graph [Figs. 2.8 and 2.9]. This construction has a peculiar property known as true-implies-false (TIF): there exist vertices A and B such that whenever A is true, then B must be false. In addition of being at the basis of several KS-type contradictions , "KS-bug" is the simplest example of TIF structure [102]. There is a strong connection between these structures and inequality-free proofs, since the vectors used in the Hardy’s inequality-free proof [26] appear also in the famous "18 vectors proof" proposed in Ref. [103], and the aforementioned vectors appearing in the Cabello *et al.* inequality-proof [33], together with the state vector and more two additional vectors, define a KS-bug.

Despite all the mentioned similarities, however, it is important to keep in mind that the results and discussions presented in this chapter on logical contextuality and inequalities-free proofs are *not* equivalent to KS-like proofs. KS-like proofs are contradictions between assignments of logical values to projectors and NC, which in this context is read as a consistent assignment to all projectors at once. In particular, there is no reference to preparations, or, in other words, such proofs are state independent. This is clearly not the case of Hardy nonlocality paradox, for instance, which does not work with product or maximally entangled states. Of course any KS-like proof can be translated to our "probabilistic/possibilistic language", the converse, however, is not true.

Final Remarks

In this work we have investigated the connection between logical contextuality and inequality-free proofs. As main results, we demonstrated that the occurrence of specific sets of possibilistic conditions is a necessary and sufficient condition for logical contextuality in the n-cycle scenarios [Theorem 10], for simple scenarios with dichotomic measurements [Theorem 11], and for general n-cycle scenarios [Theorem 12]. As a consequence of Theorem 10 we concluded that the only strongly contextual behaviors for the n-cycle scenarios are generalizations of the PR-boxes [Theorem 13]. In addition, we review the main inequality-free proofs for contextuality and nonlocality under the light of the developed formalism.

According to our discussion, the concept we introduced in Def. 17, possibilistic paradoxes, can be understood as the possibilistic analogue of non-contextuality inequalities [Def. 7]. With such a concept and the mentioned results on hand, we believe that we now have a better understanding on possibilistic non-classicalities. In addition, we reach our main goal, namely to extend the results of Mansfield and Fritz [40].

Since contextuality is a central concept in quantum foundations as well as a fundamental resource in quantum technologies [92, 104], including quantum computation [105–109], quantum cryptography [110, 111], random number generation [112, 113], and so on, we believe that the investigation presented in this master's thesis is justified, as well as possible continuations. Possible future works may include investigations on bounds for "Hardy's probabilities" in the same fashion of Ref. [99]. That is, Tsirelson-like bounds to experiments used in inequality-free proofs of quantum contextuality and nonlocality. Other possibilities include bounds provided by information causality principle [114], exclusivity principle [115], and so on. Another possible direction of future research is the possibility of a probabilistic version of Theorem 11.

The results presented in this Master's thesis cannot be extended for scenarios whose contexts have more than two measurements. That is, Theorems 10–12 cannot be stated in this generality. The reason for this is that the number of possible "types" of possibilistic paradoxes like (2.13) rapidly increases as the complexity of the scenario increases. For instance, in a tripartite Bell scenarios, a "brute-force calculation" shows that there are, in addition to those considered in Eq. (2.31), all possible variations of the PP defined in Ref. [116]. Therefore, unlike the simple scenarios, where there is a friendly and closed form the possibilistic paradoxes whose occurrence is necessary and sufficient for logical contextuality [Eq. (2.13)], for more general scenarios there may be a rich and complex zoo of such paradoxes. Another possible explanation from a complexity theory perspective can be founded in Ref. [117].

Bibliography

[1] K. v. Klitzing, G. Dorda, and M. Pepper, Phys. Rev. Lett. **45**, 494 (1980).

[2] K. v. Klitzing, Rev. Mod. Phys. **58**, 519 (1986).

[3] P. Mohr, B. Taylor, and D. Newell, National Institute of Standards and Technology (2019).

[4] B. P. Abbott *et al.* (LIGO Scientific Collaboration and Virgo Collaboration), Phys. Rev. Lett. **116**, 061102 (2016).

[5] M. A. Nielsen, and I L Chuang, *Quantum Computation and Quantum Information* (Cambridge University Press, Cambridge, 2000).

[6] J. S. Bell, Physics (Long Island City, NY) **1**, 195 (1964)

[7] A. Einstein, B. Podolsky, and N. Rosen, Phys. Rev. **47**, 777 (1935).

[8] J. F. Clauser, M. A. Horne, A. Shimony, and R. A. Holt, Phys. Rev. Lett. **23**, 880 (1969).

[9] A. Aspect, P. Grangier, and G. Roger, Phys. Rev. Lett. **47** 460 (1981).

[10] A. Aspect, P. Grangier, and G. Roger, Phys. Rev. Lett. **49**, 91 (1982).

[11] A. Aspect, J. Dalibard, and G. Roger, Phys. Rev. Lett. **49**, 1804 (1982).

[12] J. S. Bell, Rev. Mod. Phys. **38**, 447 (1966).

[13] S. Kochen, and E. P. Specker, J. Math. Mech. **17**, 59 (1967).

[14] A. A. Klyachko, M. A. Can, S. Binicioglu, and A. S. Shumovsky, Phys. Rev. Lett. **101**, 020403 (2008).

[15] V. Scarani, *Bell nonlocality* (Oxford University Press, Oxford, 2019).

[16] N. Brunner, D. Cavalcanti, S. Pironio, V. Scarani, and S. Wehner, Rev. Mod. Phys. **86**, 419 (2014).

[17] S. Abramsky, and A. Brandenburger, New J. Phys. **13**, 113036 (2011).

[18] A. Cabello, S. Severini, and A. Winter, Phys. Rev. Lett. 112, 040401 (2014).

[19] B. Amaral, and M. T. Cunha, *On graph approaches to contextuality and their role in quantum theory* (Springer, 2018).

[20] R. Spekkens, Phys. Rev. A **71**, 052108 (2005).

[21] V. J. Kujala, E. N. Dzhafarov, and J.-A. Larsson, Phys. Rev. Lett. 115, 150401 (2015).

[22] P. Heywood, and M. L. G. Redhead, M.L.G, Found. Phys. **13**, 481 (1983).

[23] D. M. Greenberger, M. A. Horne, and A. Zeilinger, Going Beyond Bell's Theorem, In M. Kafatos, editor, Bell's Theorem, Quantum Theory, and Conceptions of the Universe, pages 69–72. Kluwer, 1989.

[24] D. M. Greenberger, M. A. Horne, A. Shimony, and A. Zeilinger, American Journal of Physics **58**, 1131 (1990).

[25] L. Hardy, Phys. Rev. Lett. **68**, 2981 (1992).

[26] L. Hardy, Phys. Rev. Lett. **71**, 1665 (1993).

[27] N. D. Mermin, in *Fundamental Problems in Quantum Theory*, edited by D. M. Greenberger and A. Zeilinger, Ann. N. Y. Acad. Sci. (1995), Vol. 755, 616.

[28] S. Ghosh, and G. Kar, Phys. Lett. A **240**, 191 (1998).

[29] J. Cereceda, Phys. Lett. A **327**, 433 (2004).

[30] J. Chen, A. Cabello, Z. Xu, H. Su, C. Wu, and L. Kwek, Phys. Rev. A **88**, 062116 (2013).

[31] S. Abramsky, C. Constantin, and S. Ying, Information and Computation **250**, 3 (2016).

[32] H. Meng, J. Zhou, Z. Xu, H. Su, T. Gao, F. Yan, and J. Chen, Phys. Rev. A **98**, 062103 (2018).

[33] A. Cabello, P. Badziag, M. Terra Cunha, and M. Bourennane, Phys. Rev. Lett. **111**, 180404 (2013).

[34] D. Boschi, S. Branca, F. De Martini, and L. Hardy, Phys. Rev. Lett. **79**, 2755 (1997).

[35] M. Barbieri, C. Cinelli, F. De Martini, and P. Mataloni, Eur. Phys. J. D **32**, 261–267 (2005).

[36] M. Yang, H. Meng, J. Zhou, Z. Xu, Y. Xiao, K. Sun, J. Chen, J. Xu, C. Li, and G. Guo, Phys. Rev. A **99**, 032103 (2019).

[37] B. Marques, J. Ahrens, M. Nawareg, A. Cabello, and M. Bourennane, Phys. Rev. Lett. **113**, 250403 (2014).

[38] L. Chen, W. Zhang, Z. Wu, J. Wang, R. Fickler, and E. Karimi, Phys. Rev. A **96**, 022115 (2017).

[39] A. Fine, Phys. Rev. Lett. **48**, 291 (1982).

[40] S. Mansfield, and T. Fritz, Found Phys **42**, 709 (2012).

[41] L. Santos, and B. Amaral, Phys. Rev. A **104**, 022201 (2021).

[42] G. Ghirardi, A. Rimini, and T. Weber, Lett. Nuovo Cimento **27**, 293 (1980).

[43] A. Peres, *Quantum Theory: Concepts and Methods* (Kluwer, Dordrecht, 1993).

[44] E. Specker, Dialectica **14**, 239 (1960).

[45] Y. Liang, R. Spekkens, and H. Wiseman, Phys. Rep. **506** 1 (2011).

[46] C. Budroni, N. Miklin, and R. Chaves, Phys. Rev. A **94**, 042127 (2016).

[47] G. Carù. *Detecting contextuality: Sheaf cohomology and All vs Nothing arguments*, Master's thesis, University of Oxford, Oxford, 2015.

[48] N. Vorob'ev, Theory of Probability & Its Applications **8**, 420 (1963).

[49] N. N. Vorob'yev, Theory of Probability & Its Applications **12**, 251 (1967).

[50] M. Terra Cunha, Phil. Trans. R. Soc. A. **377**, 20190146 (2019).

[51] S. Abramsky, S. Mansfield, and R. Soares Barbosa, Electronic Proceedings, Theor. Comput. Sci. **95**, 1 (2012).

[52] F. Shahandeh PRX Quantum **2**, 010330 (2021).

[53] God, *The Holy Bible*.

[54] S. Hossenfelder, arXiv:2010.01324 (2020).

[55] G. M. Ziegler, *Lectures on Polytopes* (Springer-Verlag, New York, 1995).

[56] M. Zukowski, and D. Kaszlikowski, Phys. Rev. A **59**, 3200 (1999).

[57] D. Kaszlikowski, and M. Zukowski, Phys. Rev. A **61**, 022114 (2000).

[58] S. Boyd, and L. Vandenberghe, *Convex Optimization*. (Cambridge University Press, Cambridge, 2004).

[59] I. Pitowsky. Quantum Probability – Quantum Logic. Lecture notes in physics. Springer-Verlag, 1989.

[60] A. Klyachko, arXiv:quant-ph/0206012.

[61] A. Cabello, S. Severini, and A. Winter, arXiv:1010.2163.

[62] M. Araújo, M. T. Quintino, C. Budroni, M. Terra-Cunha, and A. Cabello Phys. Rev. A **88**, 022118 (2013).

[63] K. F. Pál, and T. Vértesi, Phys. Rev. A **80**, 042114 (2009).

[64] C. Duarte, S. Brito, B. Amaral, and R. Chaves, Phys. Rev. A 98, 062114 (2018).

[65] K. T. Goh, J. Kaniewski, E. Wolfe, T. Vértesi, X. Wu, Y. Cai, Y. Liang, and V. Scarani, Phys. Rev. A 97, 022104 (2018).

[66] A. Rai, C. Duarte, S. Brito, and R. Chaves, Phys. Rev. A 99, 032106 (2019).

[67] B. Amaral, and M. Terra-Cunha, arXiv:1709.04812.

[68] B. S. Tsirelson, Journal of Soviet Mathematics, **36**, 557 (1987).

[69] L. J. Landau, Found. Phys. **18**, 449 (1988).

[70] L. Masanes, arXiv:0309137.

[71] M. Navascués, S. Pironio, and A. Acín Phys. Rev. Lett. **98**, 010401 (2007).

[72] M. Navascués, S. Pironio, and A. Acín, New J. Phys. **10** 073013 (2008).

[73] A. Acín, A. Leverrier, A. B. Sainz, Comm. Math. Phys. **334**, 533 (2015).

[74] E. Wolfe, *Quantum Apices: Identifying Limits of Entanglement, Nonlocality, and Contextuality*. University of Connecticut, 2014.

[75] B. Tsirelson, Lett. Math. Phys. **4**, 93 (1980).

[76] L. Lovász, IEEE Trans. Inf. Theory **25**, 1 (1979).

[77] M. Pawłowski, T. Paterek, D. Kaszlikowski, V. Scarani, A. Winter, and M. Żukowski, Nature **461**, 1101 (2009).

[78] T. Fritz, A. B. Sainz, R. Augusiak, J. B. Brask, R. Chaves, A. Leverrier, A. Acín, Nat. Commun. **4**, 2263 (2013).

[79] B. Yan, Phys. Rev. Lett. **110**, 260406 (2013).

[80] B. Amaral, M. Terra Cunha, and A. Cabello, Phys. Rev. A **89**, 030101(R) (2014).

[81] G. Chiribella, A. Cabello, M. Kleinmann, and M. P. Müller Phys. Rev. Research **2**, 042001(R) (2020).

[82] R. Rabelo, C. Duarte, A. J. L.-Tarrida, M. Terra Cunha, and A. Cabello, J. Phys. A: Math. Theor. **47** 424021 (2014).

[83] L. Vandré, and M. Terra Cunha, arXiv:2105.08561

[84] B. Amaral, M. Terra Cunha, and A. Cabello, *Graph Approaches to Contextuality* (In preparation).

[85] S. Mansfield, The Mathematical Structure of Non-locality and Contextuality, PhD thesis, University of Oxford, Oxford, 2013.

[86] S. Mansfield, Phys. Rev. A **95**, 022122 (2017).

[87] A. W. Simmons, J. J. Wallman, H. Pashayan, S. D. Bartlett, and T. Rudolph, New J. Phys. **19** 033030 (2017).

[88] C. Constantin, *Sheaf -Theoretic Methods in Quantum Mechanics and Quantum Information Theory*, Ph.D thesis, University of Oxford, Oxford, 2015.

[89] A. W. Simmons, *Possibilistic (and other) notions of contextuality*, Imperial College of Science, Technology and Medicine Department of Physics, London, 2018.

[90] G. Carú, *Logical and Topological Contextuality in Quantum Mechanics and Beyond*, Ph.D thesis, University of Oxford, Oxford, 2019.

[91] S. Abramsky, R. S. Barbosa, and S. Mansfield, Phys. Rev. Lett. **119**, 050504 (2017).

[92] B. Amaral, Philosophical Transactions of the Royal Society A **377**, 20190010 (2019).

[93] S. Popescu, and D. Rohrlich, Found. Phys. **24**, 379 (1994).

[94] K. Beer, and T. J. Osborne, Phys. Rev. A **98**, 052124 (2018).

[95] S. A. Cook, The Complexity of Theorem-proving Procedures. In Proceedings of the Third Annual ACM Symposium on Theory of Computing, STOC'71, pages 151–158, New York, NY, USA, (1971). ACM.

[96] Translated into English by: B. A. Trakhtenbrot, Annals of the History of Computing **6** (4): 384–400 (1984).

[97] G. Kar, Phys. Lett. A **228**, 119 (1997).

[98] S. Goldstein, Phys. Rev. Lett. **72**, 1951 (1994).

[99] R. Rabelo, L. Y. Zhi, and V. Scarani, Phys. Rev. Lett. **109**, 180401 (2012).

[100] A. Cabello, Phys. Rev. A **58**, 1687 (1998).

[101] W. van Dam, Nat. Comput. **12**, 9 (2013).

[102] A. Cabello, J. R. Portillo, A. Solís, and K. Svozil, Phys. Rev. A **98**, 012106 (2018).

[103] A. Cabello, J. M. Estebaranz, and G. García-Alcaine, Phys. Lett. A **212**, 183 (1996).

[104] B. Amaral, A. Cabello, M. Terra Cunha, and L. Aolita, Phys. Rev. Lett. 120, 130403 (2018).

[105] R. Raussendorf, Phys. Rev. A **88**, 022322 (2013).

[106] M. Howard, J. Wallman, V. Veitch, and J. Emerson, Nature (London) **510**, 351 (2014).

[107] A. L. Oestereich, and E. F. Galvão, Phys. Rev. A **96**, 062305 (2018).

[108] J. Bermejo-Vega, N. Delfosse, D. E. Browne, C. Okay, and R. Raussendorf, Phys. Rev. Lett. 119, 120505 (2017).

[109] M. Frembs, S. Roberts, and S. D. Bartlett, New J. Phys. **20**, 103011 (2018).

[110] H. Bechmann-Pasquinucci, and A. Peres, Phys. Rev. Lett. **85**, 3313 (2000).

[111] K. Svozil, in *Physics and Computation 2010*, edited by H. Guerra (University of Azores, Ponta Delgada, Portugal, 2010)

[112] R. Colbeck, *Quantum and Relativistic Protocols for Secure Multi-Party Computation*, Ph.D. thesis, University of Cambridge, Cambridge, 2006.

[113] A. Abbott, C. S. Calude, J. Conder, and K. Svozil, Phys. Rev. A **86**, 062109 (2012).

[114] A. Ahanj, S. Kunkri, A. Rai, R. Rahaman, and P. S. Joag, Phys. Rev. A **81**, 032103 (2010).

[115] S. Das, M. Banik, M. R. Gazi, A. Rai, and S. Kunkri, Phys. Rev. A **88**, 062101 (2013).

[116] Z. Wang, and D. Markham, Phys. Rev. Lett. **108**, 210407 (2012).

[117] A. W. Simmons, Journal of Logic and Computation **28**, 203 (2018).